STR-DE310

SERVICE MANUAL

US Model
Canadian Model

- STR-DE310 is similar to the earlier STR-DE305 model.
- Refer to STR-DE305 service manual (9-960-470-XX) for information not contained in this service manual.

• DIFFERENCE TABLE

NOTE:

- Items marked "*" are not stocked since they are seldom required for routine service. Some delay should be anticipated when ordering these items.

Page	STR-DE305			STR-DE310		
	Ref. No.	Part No.	Description	Ref. No.	Part No.	Description
26		EXPLODED VIEWS **********			EXPLODED VIEWS **********	
	1	X-4946-863-1	PANEL ASSY, FRONT (US, Canadian)	1	X-4948-421-1	PANEL ASSY, FRONT
28	* 64	4-980-651-01	PANEL, BACK (MALAYSIA PRODUCT) (US)	* 64	4-980-651-62	PANEL, BACK (CHINA PRODUCT) (US)
				* 64	4-980-651-81	PANEL, BACK (MALAYSIA PRODUCT)(US)
	* 64	4-980-651-11	PANEL, BACK (MALAYSIA PRODUCT) (Canadian)	* 64	4-980-651-72	PANEL, BACK (CHINA PRODUCT) (Canadian)
35		ACCESSORIES & PACKING MATERIALS **********			ACCESSORIES & PACKING MATERIALS **********	
		3-810-995-21	MANUAL, INSTRUCTION (ENGLISH) (US, Canadian, AUS)		3-859-380-31	MANUAL, INSTRUCTION (ENGLISH) (US)
		3-810-995-31	MANUAL, INSTRUCTION (FRENCH) (Canadian)		3-859-380-21	MANUAL, INSTRUCTION (FRENCH) (Canadian)

FM STEREO / FM-AM RECEIVER

SONY®

996089111

MICROFILM

9-960-891-11

Sony Corporation
Home A&V Products Company

97C0425-1D
Printed in Japan ©1997.3
Published by Service and Safety Engineering Dept. (Shibaura)

STR-DE305

SERVICE MANUAL

US Model
Canadian Model
AEP Model
E Model
Australian Model
Chinese Model

Photo : US model

SPECIFICATIONS

Audio power specifications

POWER OUTPUT AND TOTAL HARMONIC DISTORTION
With 8-ohm load, both channels driven, from 20 - 20,000 Hz, rated 100 watts per channel minimum RMS power, with no more than 0.1 % total harmonic distortion from 150 milliwatts to rated output.
(US Model)

Amplifier section

Power output
EXCEPT US,AEP,
German model :
100 W+100 W
(8ohm, 20 - 20kHz, 0.1% THD)
AEP, German model :
90 W+90 W
(DIN 1kHz, 4 ohms)

Frequency response	PHONO: RIAA equalization curve ±0.5 dB CD, TAPE/MD, VIDEO: 10 Hz - 50 kHz ±1 dB

Inputs

	Sensitivity	Impedance	S/N (weighting network, input level)
PHONO (MM)	2.5 mV	50 kilohms	74 dB 72 dB* (A, 2.5 mV)
CD	200 mV	50 kilohms	82 dB 82 dB (A, 150 mV)
TAPE/ MD, TV, VIDEO	150 mV		

* '78 IHF

Outputs	TAPE/MD REC OUT: Voltage 150 mV, Impedance 10 kilohms VIDEO AUDIO OUT: Voltage 150 mV, Impedance 10 kilohms PHONES: Accepts low and high impedance headphones
Muting	Full mute
BASS BOOST	+10 dB at 70 Hz
TONE	±8 dB at 100 Hz and 10 kHz

FM tuner section

Tuning range	87.5 - 108.0 MHz
Antenna terminals	75 ohms, unbalanced 300 ohms, unbalanced
Sensitivity	Mono: 18.3 dBf, 4.5 µV Stereo: 38.3 dBf, 45 µV
Usable sensitivity	11.2 dBf, 2 µV (IHF)
S/N	Mono: 76 dB Stereo: 70 dB
Harmonic distortion at 1 kHz	Mono: 0.3 % Stereo: 0.5 %
Separation	45 dB at 1 kHz
Frequency response	30 Hz - 15 kHz +0.5 -3 dB
Selectivity	60 dB at 400 kHz

AM tuner section

Tuning range	US, Canadian model : 530 - 1,710 kHz(10 kHz*) 531 - 1,710 kHz(9 kHz) EXCEPT US, Canadian model : 530 - 1,610 kHz(10 kHz*) 531 - 1,602 kHz(9 kHz)
Antenna	Loop antenna
Usable sensitivity	50 dB/m (at 1,000 kHz or 999 kHz)
S/N	54 dB (at 50 mV/m)
Harmonic distortion	0.5 % (50 mV/m, 400 Hz)
Selectivity	At 9 kHz: 35 dB At 10 kHz: 40 dB

* You can change the AM tuning interval to 9 kHz. After tuning in any AM station, turn off the receiver. Hold down the TUNING + button and press the POWER button. All preset stations will be erased when you change the interval. To reset the interval to 10 kHz, repeat the procedure.

— Continued on page 2 —

MICROFILM

FM STEREO/FM-AM RECEIVER

SONY®

General

System	Tuner section: PLL quartz-locked digital synthesizer system Preamplifier section: Low-noise NF type equalizer Power amplifier section: Pure-complimentary SEPP
Power requirements	US, Canadian model : 120 V AC, 60Hz E model : 120/220/240 V AC, 50/60 Hz adjustable Australian model : 240 V AC, 50/60Hz AEP, German, Singapore, Malaysia, Chinese model : 220-230 V AC, 50/60Hz
Power consumption	US model : 175 W Canadian model : 270 VA E model : 200 W Australian model : 210 W AEP, German, Singapore, Malaysia, Chinese model : 180 W
AC outlets	1 switched, total 120 W/ 1A Max
Dimensions	17 x 5 7/8 x 11 3/8 inches (430 x 148 x 295 mm)
Mass (Approx.)	7.0 kg (15 lb 6 oz)
Supplied accessories	FM wire antenna (1) AM loop antenna (1) Remote controller (remote) (1) Size AA (R6) batteries (2)

Design and specifications are subject to change without notice.

TABLE OF CONTENTS

Specifications ····· 1
Safety check-out ····· 3

1. GENERAL
Location and Function of controls ····· 4

2. EXPLANATION OF IC TERMINALS ····· 6

3. DIAGRAMS
3-1. Circuit Boards Location ····· 8
3-2. Printed Wiring Boards (Main Section) ····· 10
3-3. Schematic Diagram (Main Section) ····· 15
3-4. Schematic Diagram (Display Section) ····· 19
3-5. Printed Wiring Boards (Display Section) ····· 23

4. EXPLODED VIEWS
4-1. Front panel Section ····· 26
4-2. Chassis Section ····· 27

5. ELECTRICAL PARTS LIST ····· 29

MODEL IDENTIFICATION

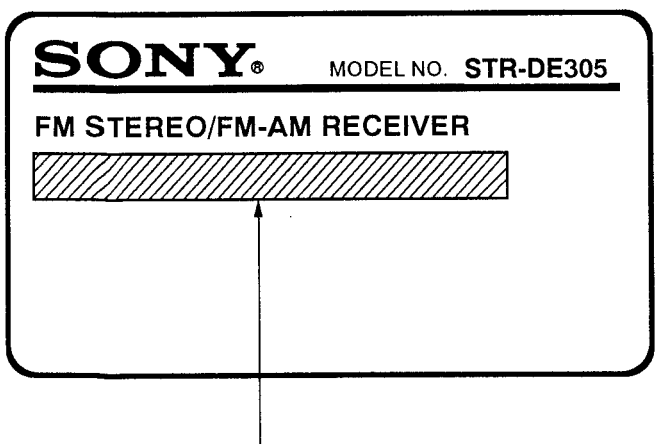

US, Canadian model : AC 120V 60Hz
Australian model : AC 240V~50/60Hz
E model : AC 120, 220, 240V selectable~50/60Hz
AEP, German, Singapore, Malaysia, Chinese model : AC 220-230V~50/60Hz

SAFETY-RELATED COMPONENT WARNING!!

COMPONENTS IDENTIFIED BY MARK ⚠ OR DOTTED LINE WITH MARK ⚠ ON THE SCHEMATIC DIAGRAMS AND IN THE PARTS LIST ARE CRITICAL TO SAFE OPERATION. REPLACE THESE COMPONENTS WITH SONY PARTS WHOSE PART NUMBERS APPEAR AS SHOWN IN THIS MANUAL OR IN SUPPLEMENTS PUBLISHED BY SONY.

ATTENTION AU COMPOSANT AYANT RAPPORT À LA SÉCURITÉ!

LES COMPOSANTS IDENTIFIÉS PAR UNE MARQUE ⚠ SUR LES DIAGRAMMES SCHÉMATIQUES ET LA LISTE DES PIÈCES SONT CRITIQUES POUR LA SÉCURITÉ DE FONCTIONNEMENT. NE REMPLACER CES COMPOSANTS QUE PAR DES PIÈCES SONY DONT LES NUMÉROS SONT DONNÉS DANS CE MANUEL OU DANS LES SUPPLÉMENTS PUBLIÉS PAR SONY.

SAFETY CHECK-OUT

After correcting the original service problem, perform the following safety check before releasing the set to the customer:
Check the antenna terminals, metal trim, "metallized" knobs, screws, and all other exposed metal parts for AC leakage. Check leakage as described below.

LEAKAGE TEST

The AC leakage from any exposed metal part to earth ground and from all exposed metal parts to any exposed metal part having a return to chassis, must not exceed 0.5 mA (500 microampers). Leakage current can be measured by any one of three methods.

1. A commercial leakage tester, such as the Simpson 229 or RCA WT-540A. Follow the manufacturers' instructions to use these instruments.
2. A battery-operated AC milliammeter. The Data Precision 245 digital multimeter is suitable for this job.
3. Measuring the voltage drop across a resistor by means of a VOM or battery-operated AC voltmeter. The "limit" indication is 0.75 V, so analog meters must have an accurate low-voltage scale. The Simpson 250 and Sanwa SH-63Trd are examples of a passive VOM that is suitable. Nearly all battery operated digital multimeters that have a 2 V AC range are suitable. (See Fig. A)

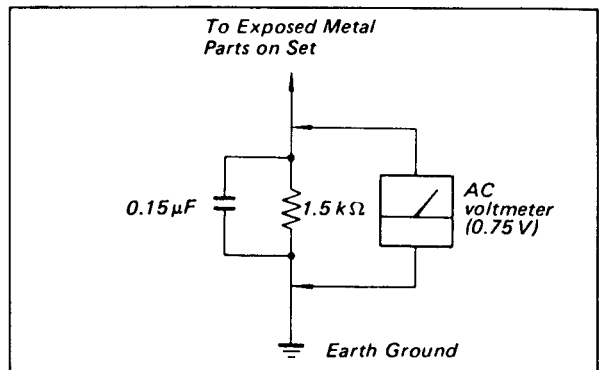

Fig. A. Using an AC voltmeter to check AC leakage.

SECTION 1
GENERAL

LOCATION AND FUNCTION OF CONTROLS

[FRONT PANEL]

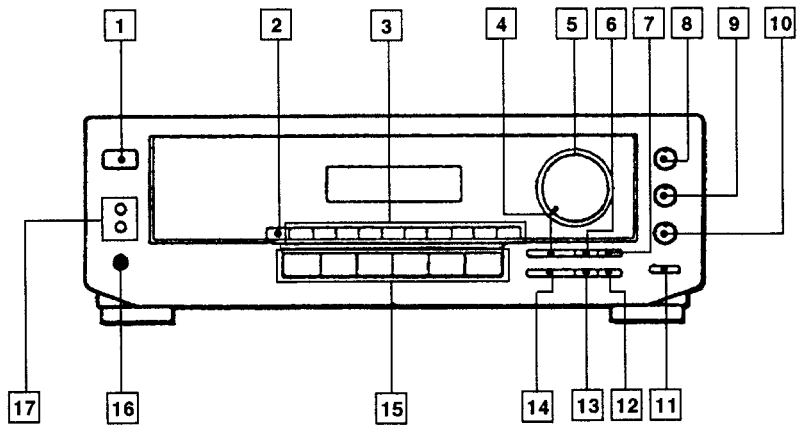

1 POWER switch
2 DIRECT button
3 Numeric buttons
4 PRESET TUNING +, − buttons
5 VOLUME control
6 SHIFT button
7 FM MODE button
8 BASS control
9 TREBLE control
10 BALANCE control
11 BASS BOOST button
12 MEMORY button
13 FM/AM button
14 TUNING +, − buttons
15 Function buttons
16 PHONES jack
17 SPEAKERS switches

[REAR PANEL]

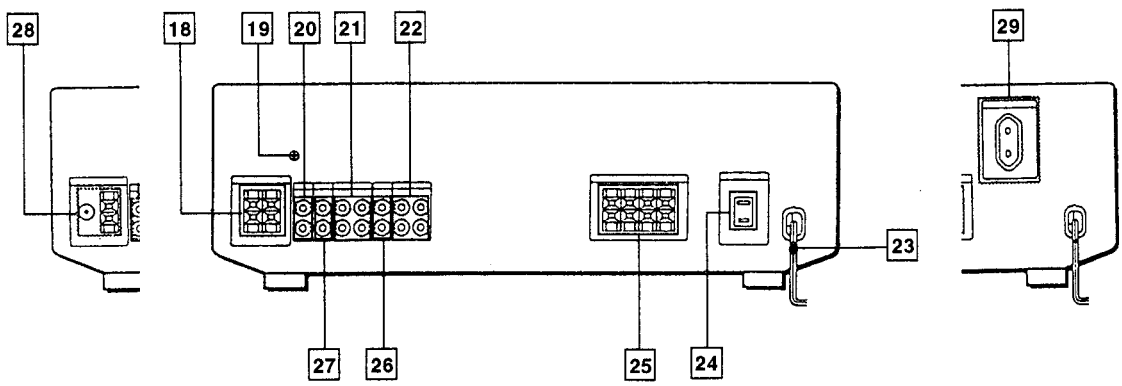

18 ANTENNA (AM/FM) (US, Canadian, E model)
19 ⏚ Ground terminal
20 PHONO
21 TAPE/MD
22 VIDEO
23 AC power cord
24 SWITCHED AC OUTLET (US, Canadian, E model)
25 FRONT SPEAKERS (A/B)
26 TV
27 CD
28 ANTENNA (AM/FM) (EXCEPT US, Canadian, E model)
29 SWITCHED AC OUTLET (EXCEPT US, Canadian, E model)

【Remote】

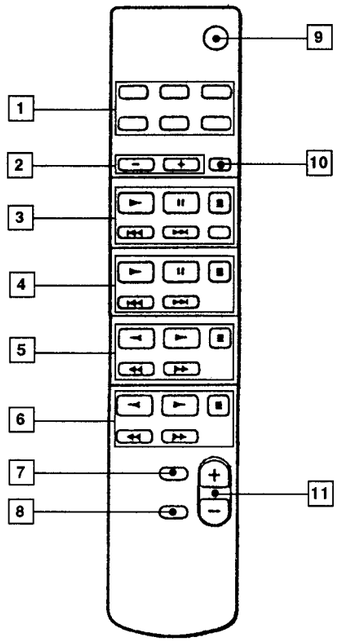

1 FUNCTION buttons
2 PRESET +, – buttons
3 CD control buttons
4 MD control buttons
5 TAPE DECK A control buttons
6 TAPE DECK B control buttons
7 BASS BOOST button
8 MUTING button
9 POWER button
10 SHIFT button
11 VOL buttons

SECTION 2
EXPLANATION OF IC TERMINALS

IC201 (μ PD78044AGF-165-3B9)

Pin No.	Pin name	I/O	Description
1	DIG7	O	Fluorescent indicator tube drive.
2	DIG6	O	
3	DIG5	O	
4	DIG4	O	
5	DIG3	O	
6	DIG2	O	
7	DIG1	O	
8	+5V	–	Power supply. (+5V)
9	$\overline{\text{S. CLK}}$	I	System clock.
10	$\overline{\text{S. DATA}}$	I	System data.
11	$\overline{\text{PLL. DATA}}$	I	PLL data input from TU001.
12	S. CE (LC7288)	O	Chip enable output.
13	$\overline{\text{S. CE (LV100)}}$	–	Not used. (Open)
14	VERISON	I	Input for model select.
15	$\overline{\text{PROTECT}}$	I	Protector detect input.
16	BRIDGE	–	Not used. (Open)
17	$\overline{\text{RESET}}$	I	System reset terminal.
18	$\overline{\text{AUTO-STOP}}$	I	Auto stop detect input.
19	$\overline{\text{STEREO-IN}}$	I	Stereo detect input.
20	AVss	–	Ground.
21	SP-RY	O	Speaker relay drive.
22	SURR-RY	–	Not used. (Open)
23	POWER-RY	O	Power relay drive.
24	DOWN	O	Volume down control.
25	UP	O	Volume up control.
26	SIGNAL	I	A/D signal input terminal.
27	A/D2	I	A/D2 key input terminal.
28	A/D1	I	A/D1 key input terminal.
29	AVDD	–	Power supply. (+5V)
30	AV. REF	–	Reference voltage. (+5V)
31	GND	–	Ground.
32	NC	–	Not used. (Open)
33	Vss	–	Ground.
34	X1	–	System clock. (4.19MHz)
35	X2	–	System clock. (4.19MHz)
36	IC. MUTE	O	Mute drive output for μ PD2581 (IC701).
37	$\overline{\text{HALL}}$	–	Not used. (Open)
38	$\overline{\text{THEATER}}$	–	Not used. (Open)
39	$\overline{\text{PROLOGIC}}$	–	Not used. (Open)
40	T. MUTE	O	Tuner mute drive output.

Pin No.
41
42
43
44
45
46
47
48
49
50
51
52
53
54
55
56
57
58
59
60
61
62
63
64
65
66
67
68
69
70
71
72
73
74
75
76
77
78
79
80

Description
licator tube drive.
(+5V)
from TU001.
tput.
n)
l select.
t input.
n)
rminal.
t input.
put.
rive.
n)
ve.
control.
trol.
t terminal.
terminal.
terminal.
+5V)
ge. (+5V)
n)
4.19MHz)
4.19MHz)
ut for μ PD2581 (IC701).
n)
n)
n)
e output.

Pin No.	Pin name	I/O	Description
41	$\overline{\text{VIDEO}}$	–	Not used. (Open)
42	$\overline{\text{TV/LD}}$	–	Not used. (Open)
43	$\overline{\text{STANDBY}}$	O	Standby LED drive.
44	$\overline{\text{SYS. POWER}}$	I	System power ON/OFF.
45	RDS. DATA. IN	I	RDS data input. (AEP, SP, MY, CH model)
46	RDS. CLK. IN	I	RDS clock signal input. (AEP, SP, MY, CH model)
47	$\overline{\text{STOP}}$	I	Stop signal input from NJM2103D (IC950).
48	Vss	–	Ground.
49	$\overline{\text{SIRCS}}$	I	SIRCS signal input.
50	$\overline{\text{POWER SW}}$	I	Power switch input terminal.
51	NC	–	Not used. (Open)
52	+5V	–	Power supply. (+5V)
53	BASS BOOST	–	Bass boost LED drive.
54	FUNC. MUTE	O	Line mute drive.
55	NC	–	Connect to ground.
56	KI5	I	Key in 5.
57	KI4	I	Key in 4
58	KI3	I	Key in 3
59	KI2	I	Key in 2
60	KI1	I	Key in 1.
61	GND	–	Ground.
62	S15	O	Key out 15.
63	S14	O	Key out 14.
64	S13	O	Key out 13.
65	S12	O	Key out 12.
66	S11	O	Key out 11.
67	S10	O	Key out 10.
68	S9	O	Key out 9.
69	S8	O	Key out 8.
70	S7	O	Key out 7.
71	VLOAD	–	Connect to ground.
72	S6	O	Key out 6.
73	S5	O	Key out 5.
74	S4	O	Key out 4.
75	S3	O	Key out 3.
76	S2	O	Key out 2.
77	S1	O	Key out 1.
78	DIG10	O	Fluorescent indicator tube drive.
79	DIG9	O	
80	DIG8	O	

3-1. CIRCUIT BOARDS LOCATION

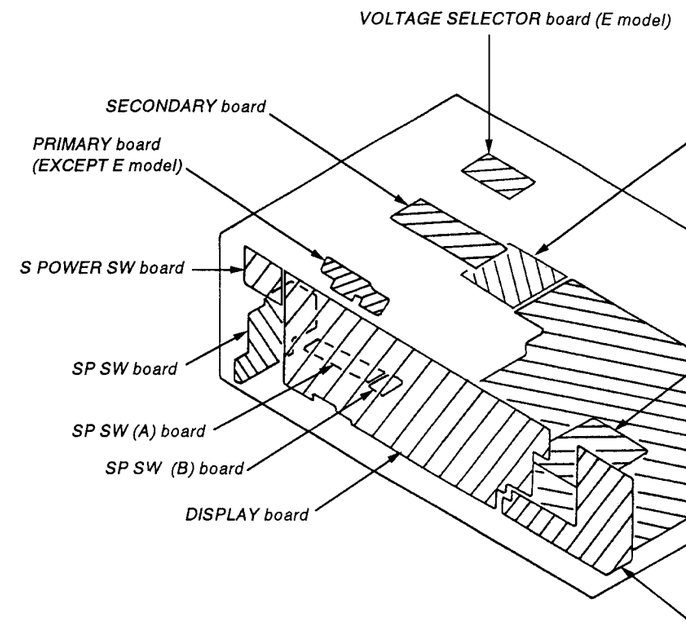

Description
d. (Open)
d. (Open)
LED drive.
power ON/OFF.
a input. (AEP, SP, MY, CH model)
ck signal input. (AEP, SP, MY, CH model)
nal input from NJM2103D (IC950).
ignal input.
witch input terminal.
l. (Open)
pply. (+5V)
st LED drive.
e drive.
to ground.
.
15.
14.
13.
12.
11.
10.
.
.
.
o ground.
.
.
.
.
.
.
nt indicator tube drive.

SECTION 3
DIAGRAMS

3-1. CIRCUIT BOARDS LOCATION

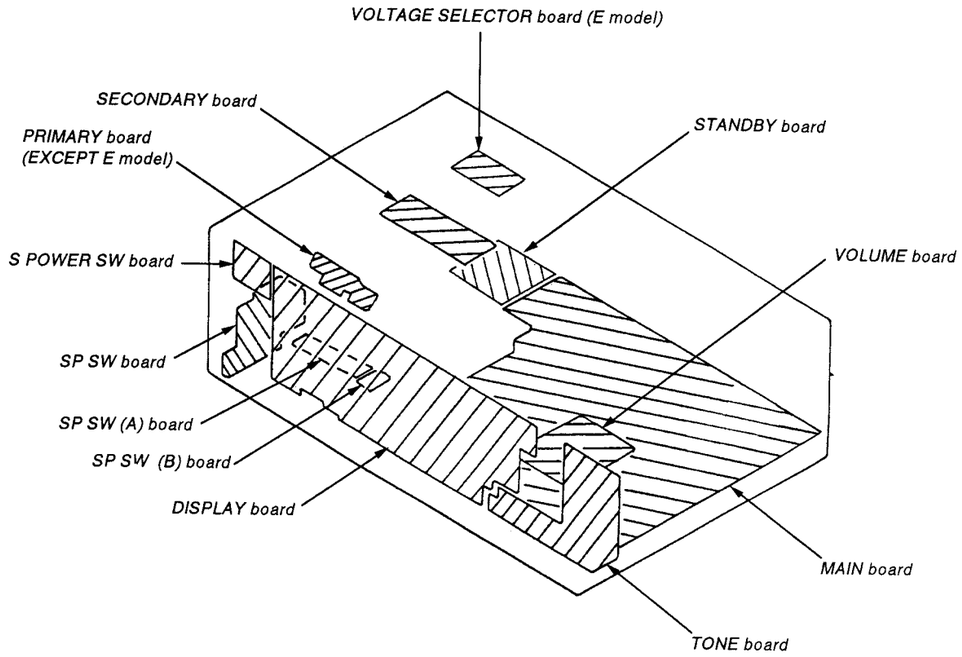

3-2. PRINTED WIRING BOARDS (MAIN SECTION)

● SEMICONDUCTOR LOCATION

Ref. No.	Location	Ref. No.	Location
D421	G - 4	Q303	H - 6
D710	J - 15	Q304	H - 7
D721	H - 10	Q401	G - 2
D722	H - 10	Q402	G - 2
D723	J - 10	Q451	G - 3
D724	I - 10	Q452	G - 3
D801	I - 11	Q701	G - 12
D802	E - 16	Q702	H - 13
D804	J - 12	Q703	H - 13
D805	I - 12	Q704	F - 13
D810	C - 17	Q710	J - 16
D811	C - 17	Q711	G - 11
D812	C - 17	Q720	H - 11
D813	C - 17	Q721	H - 10
D814	C - 16	Q722	H - 11
D815	C - 16	Q723	I - 10
D816	D - 29	Q751	C - 12
D820	D - 17	Q752	D - 13
D821	D - 16	Q753	D - 13
D822	D - 16	Q754	C - 13
D823	D - 16	Q770	C - 11
		Q801	I - 11
		Q802	C - 17
IC1	E - 6	Q803	I - 12
IC2	F - 6	Q951	B - 15
IC401	D - 8		
IC402	C - 7		
IC403	F - 8		
IC404	H - 2		
IC701	F - 11		
IC801	D - 10		
IC802	D - 10		
IC950	B - 14		

Note:

- ○— : parts extracted from the component side.
- ▒▒▒ : Pattern on the side which is seen.
- Abbreviation
  - CND ; Canadian
  - AUS : Australian
  - SP : Singapore
  - G : German
  - MY : Malaysia
  - CH : Chinese

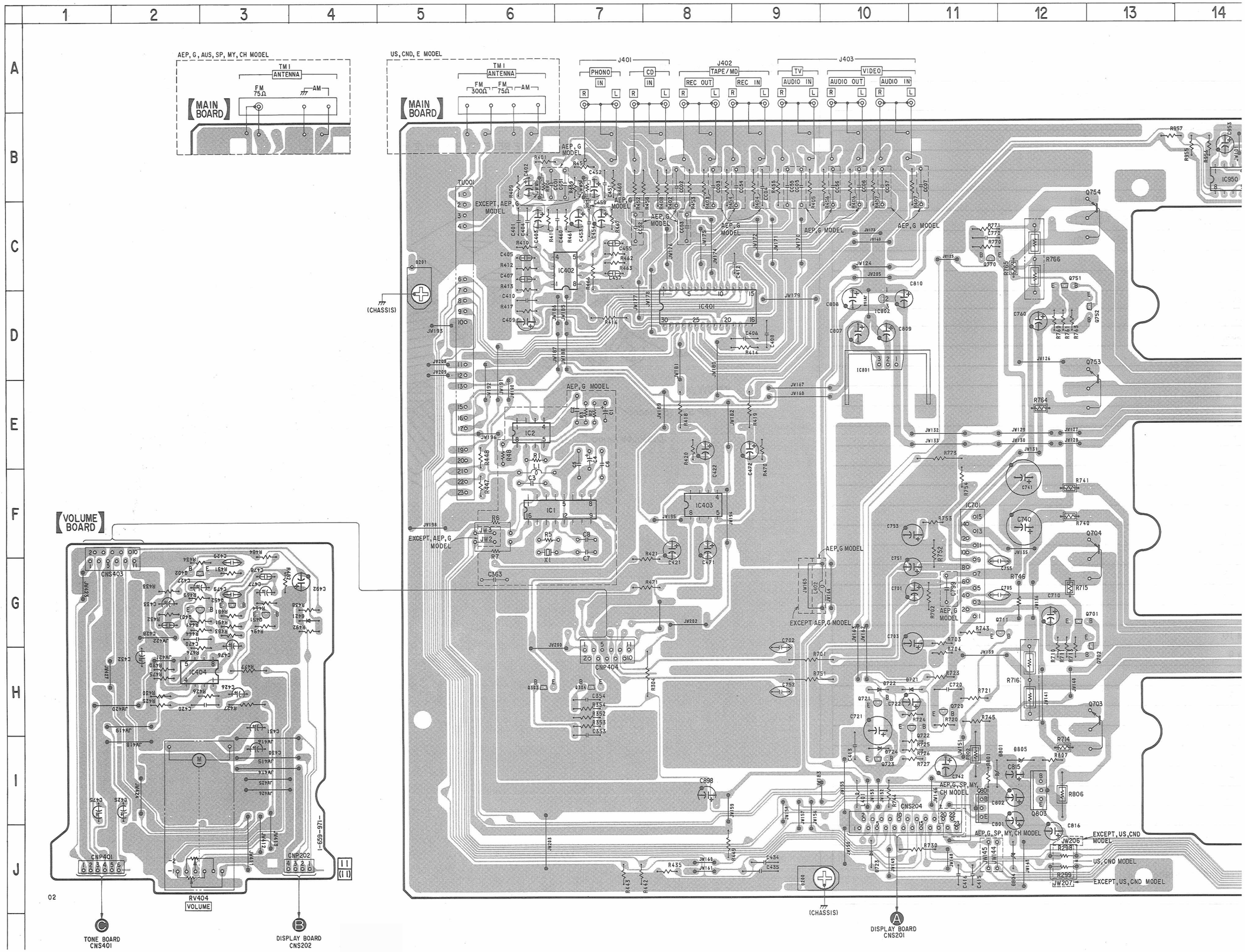

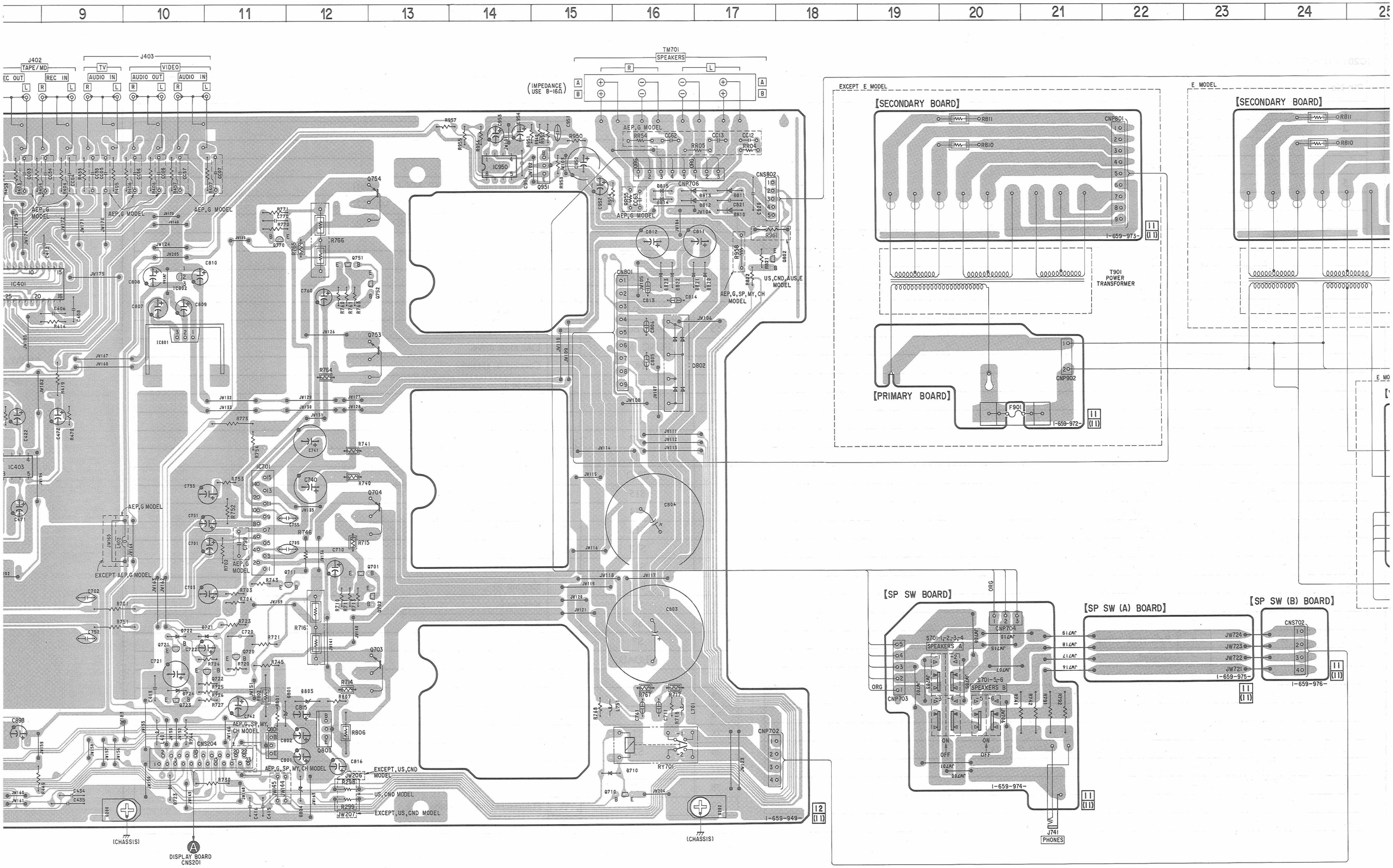
9
10
11
12
13
14
15
16
17
18
19
20
21
22
23
24
J402
TAPE/MD
REC OUT
REC IN
J403
TV
AUDIO IN
VIDEO
AUDIO OUT
AUDIO IN
TM701
SPEAKERS
(IMPEDANCE USE 8-16Ω)
AEP,G MODEL
EXCEPT AEP,G MODEL
EXCEPT E MODEL
E MODEL
【SECONDARY BOARD】
【PRIMARY BOARD】
T901
POWER TRANSFORMER
1-659-973-
1-659-972-
CNP801
CNP902
F901
US,CND,AUS,E MODEL
AEP,G,SP,MY,CH MODEL
EXCEPT,US,CND MODEL
US,CND MODEL
1-659-949-
(CHASSIS)
DISPLAY BOARD
CNS201
CNS204
CNS802
CNP702
CNP703
CNP704
RY701
【SP SW BOARD】
【SP SW (A) BOARD】
【SP SW (B) BOARD】
SPEAKERS A
SPEAKERS B
ON
OFF
ORG
CNS702
1-659-974-
1-659-975-
1-659-976-
J741
PHONES

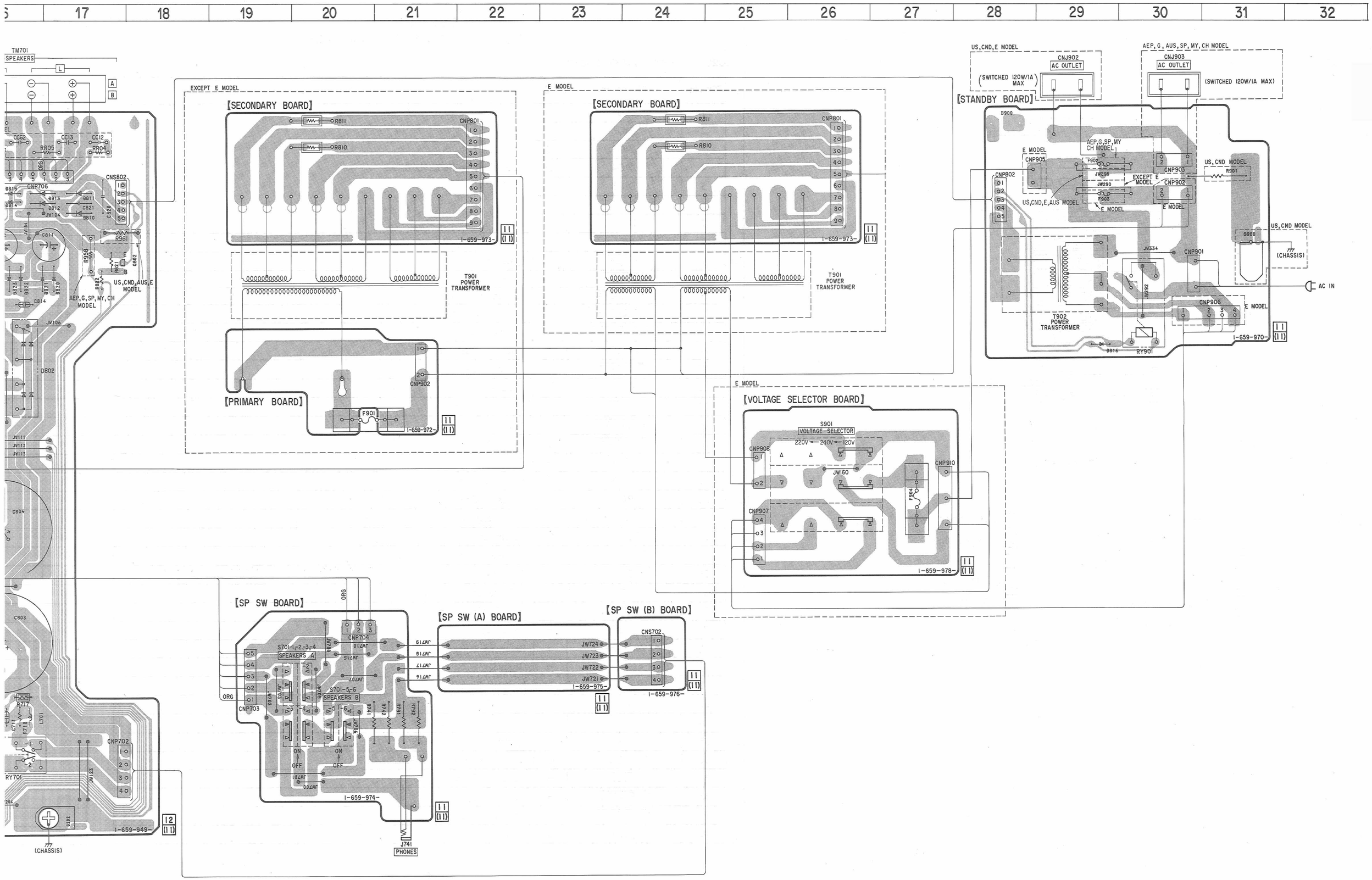

17
18
19
20
21
22
23
24
25
26
27
28
29
30
31
32
TM701
SPEAKERS
EXCEPT E MODEL
【SECONDARY BOARD】
R811
R810
CNP801
1-659-973-
T901
POWER
TRANSFORMER
【PRIMARY BOARD】
CNP902
F901
1-659-972-
E MODEL
【SECONDARY BOARD】
R811
R810
CNP801
1-659-973-
T901
POWER
TRANSFORMER
US,CND,E MODEL
CNJ902
AC OUTLET
(SWITCHED 120W/1A MAX)
AEP,G,AUS,SP,MY,CH MODEL
CNJ903
AC OUTLET
(SWITCHED 120W/1A MAX)
【STANDBY BOARD】
B900
E MODEL
CNP905
AEP,G,SP,MY
CH MODEL
CNP802
US,CND,E,AUS MODEL
EXCEPT E
MODEL
CNP903
CNP902
US,CND MODEL
R901
E MODEL
US,CND MODEL
(CHASSIS)
AC IN
CNP901
T902
POWER
TRANSFORMER
CNP906
E MODEL
RY901
1-659-970-
E MODEL
【VOLTAGE SELECTOR BOARD】
S901
VOLTAGE SELECTOR
220V
240V
120V
CNP908
JW160
CNP910
CNP907
F904
1-659-978-
【SP SW BOARD】
ORG
CNP704
S701-1,-2,-3,-4
SPEAKERS A
S701-5,-6
SPEAKERS B
CNP703
ON
OFF
1-659-974-
J741
PHONES
【SP SW (A) BOARD】
JW724
JW723
JW722
JW721
1-659-975-
【SP SW (B) BOARD】
CNS702
1-659-976-
CNP702
RY701
1-659-949-
(CHASSIS)

3-3. SCHEMATIC DIAGRAM (MAIN SECTION)

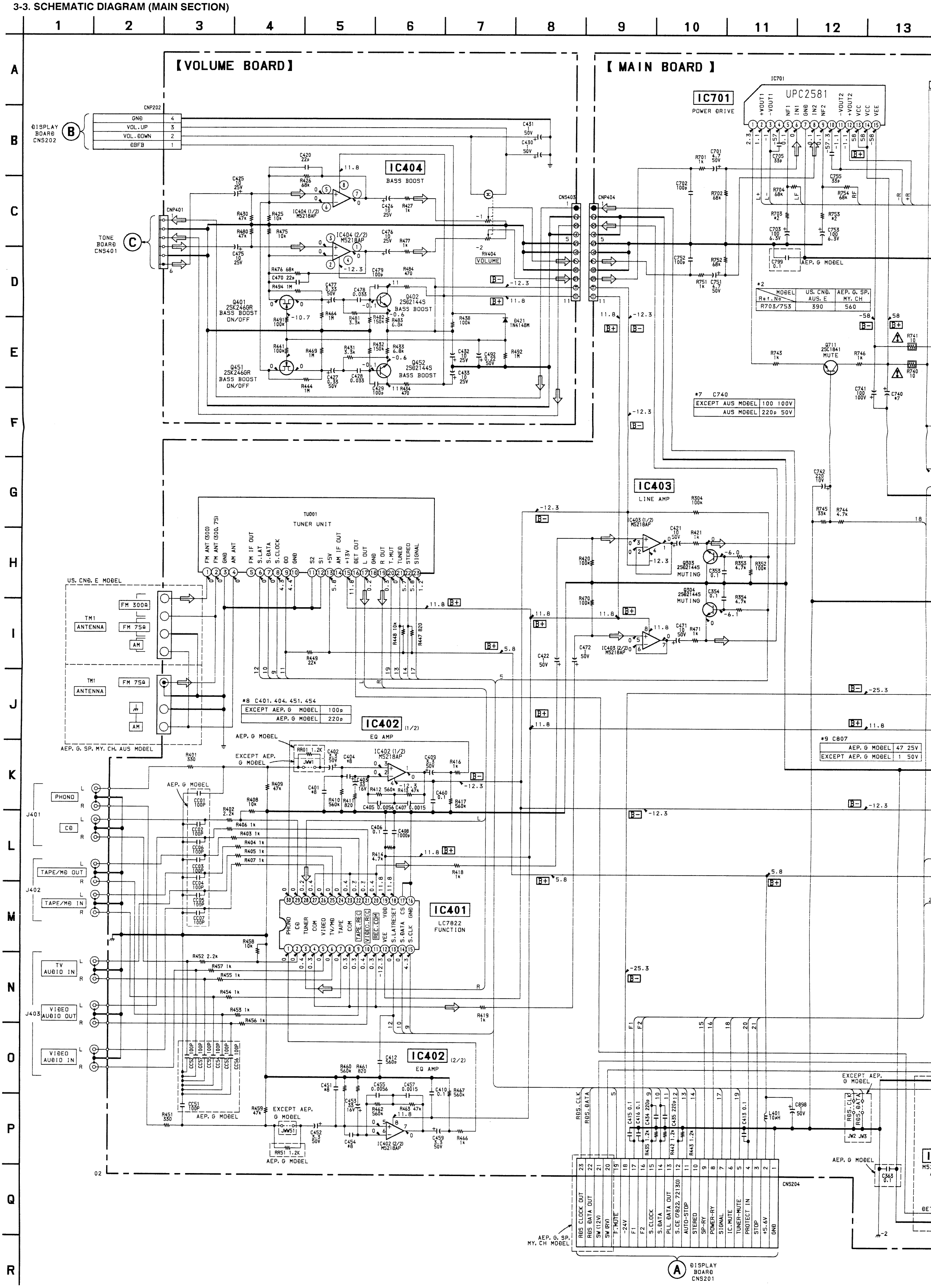

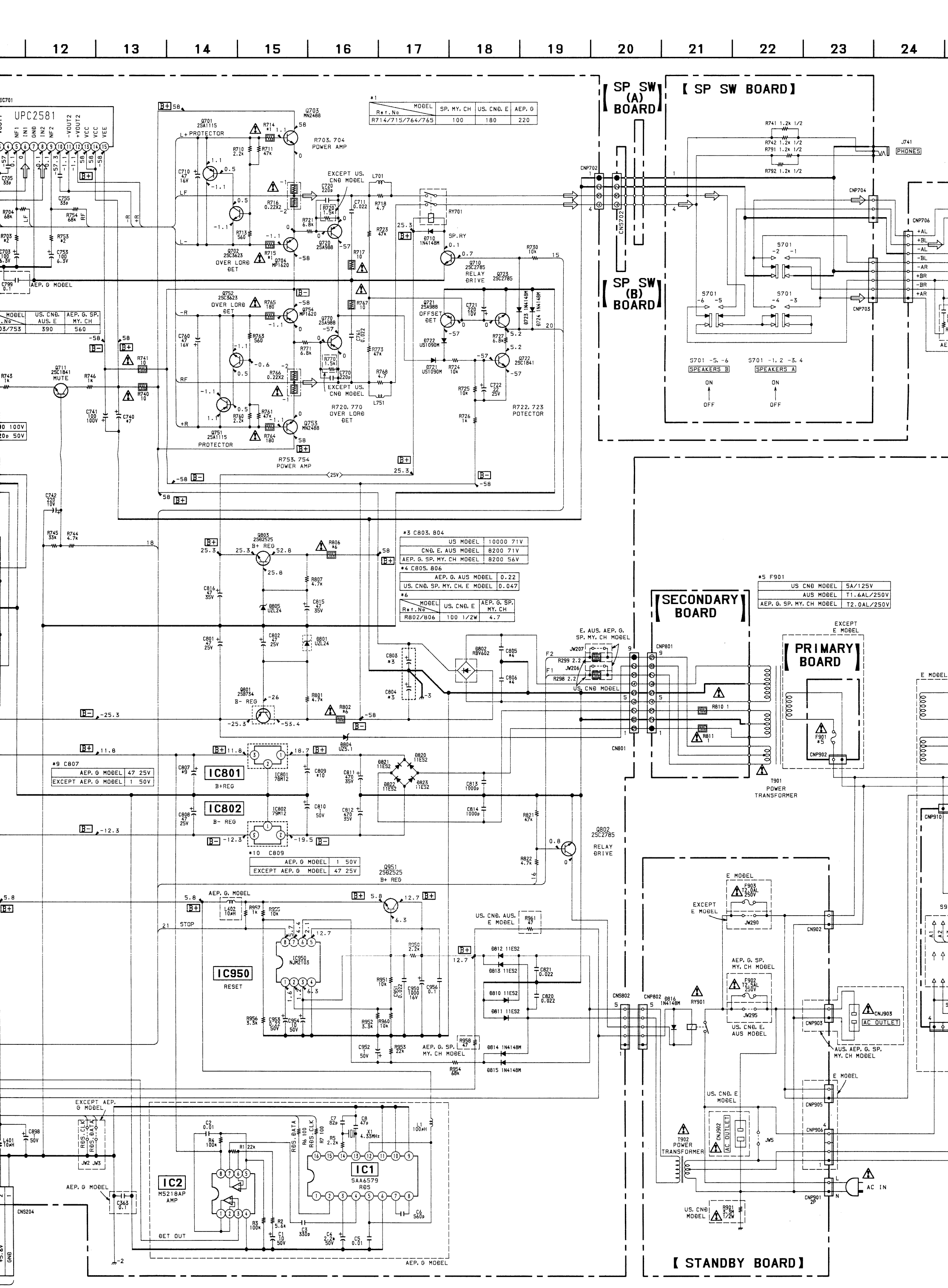

*1

Ref.No \ MODEL	SP, MY, CH	US, CND, E	AEP, G
R714/715/764/765	100	180	220

Ref.No \ MODEL	US, CND, E	AEP, G, SP, MY, CH
R703/753	390	560

*3 C803, 804

US MODEL	10000 71V
CND, E, AUS MODEL	8200 71V
AEP, G, SP, MY, CH MODEL	8200 56V

*4 C805, 806

AEP, G, AUS MODEL	0.22
US, CND, SP, MY, CH, E MODEL	0.047

*6

Ref.No \ MODEL	US, CND, E	AEP, G, SP, MY, CH
R802/806	100 1/2W	4.7

*5 F901

US CND MODEL	5A/125V
AUS MODEL	T1.6AL/250V
AEP, G, SP, MY, CH MODEL	T2.0AL/250V

*9 C807

AEP, G MODEL	47 25V
EXCEPT AEP, G MODEL	1 50V

*10 C809

AEP, G MODEL	1 50V
EXCEPT AEP, G MODEL	47 25V

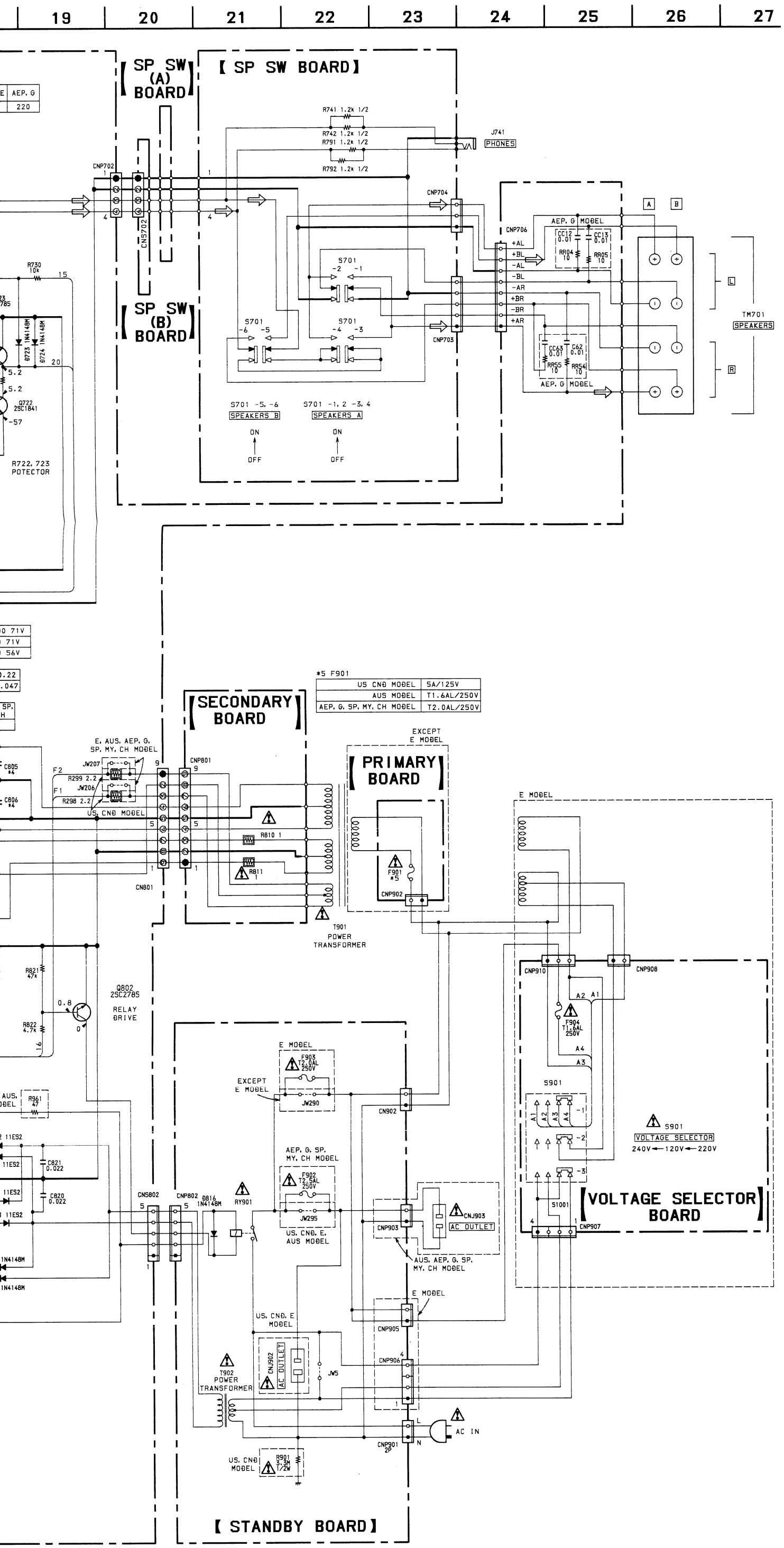

• IC BLOCK DIAGRAMS – MAIN SECTION –

IC401 LC7822

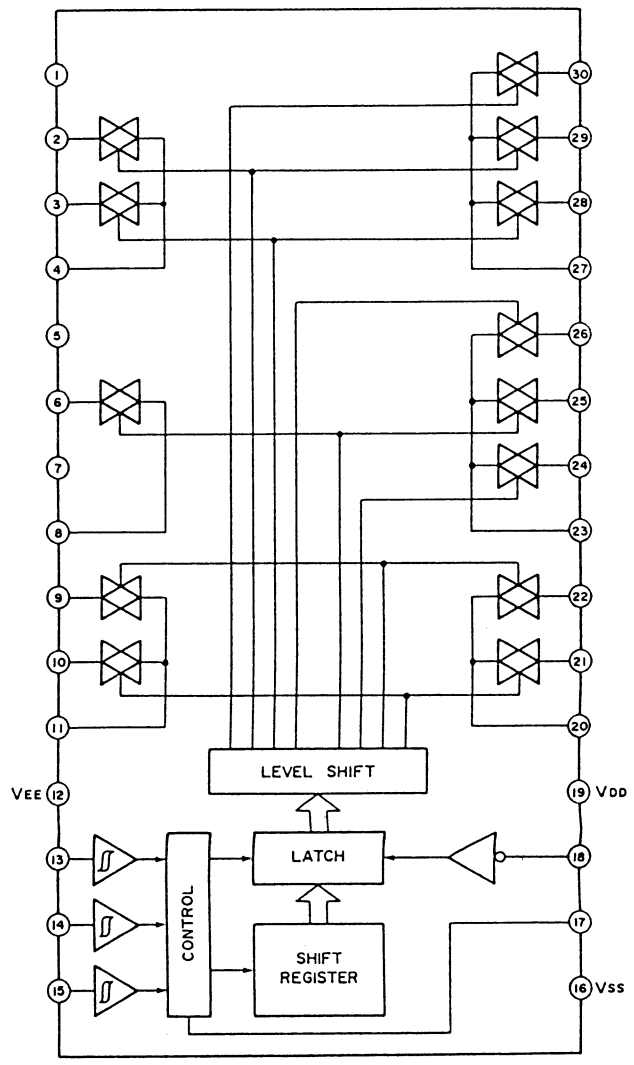

IC950 NJM2103D

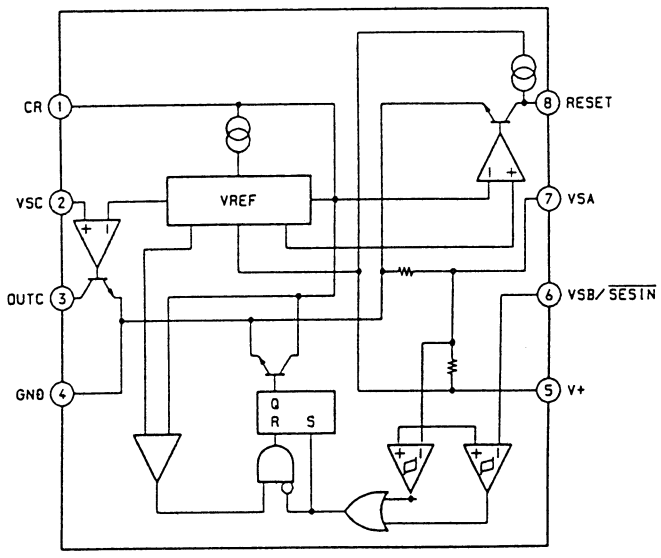

Note :

- All capacitors are in μ F unless otherwise noted. pF: μ μ F 50WV or less are not indicated except for electrolytics and tantalums.
- All resistors are in Ω and ¼W or less unless otherwise specified.
- △ : internal component.
- ▭ : nonflammable resistor.

Note :	Note :
The components identified by mark ⚠ or dotted line with mark ⚠ are critical for safety. Replace only with part number specified.	Les composants identifiés par une marque ⚠ sont critiques pour la sécurité. Ne les remplacer que par une pièce portant le numéro spécifié.

- B+ : B+ Line
- B − : B − Line
- Voltage is dc with respect to ground under no-signal (detuned) conditions.
  no mark : FM
  ( ) : AM
- Voltages are taken with a VOM (Input impedance 10M Ω). Voltage variations may be noted due to normal production tolerances.
- Signal path.
  ⇨ : FM
- Abbreviation
  CND ; Canadian
  AUS : Australian
  SP : Singapore
  G : German
  MY : Malaysia
  CH : Chinese

3-4. SCHEMATIC DIAGRAM (DISPLAY SECTION)

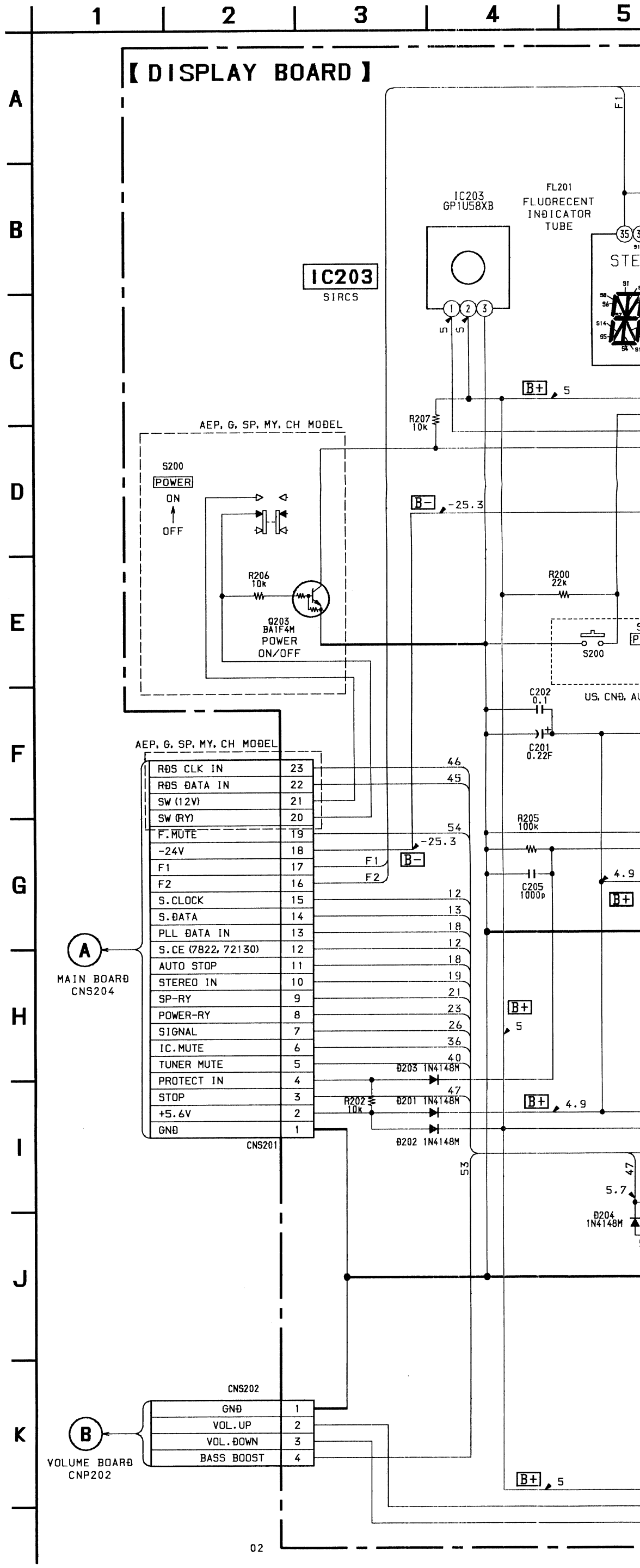

• IC BLOCK DIAGRAM – DISPLAY SECTION –

IC202 BA6208

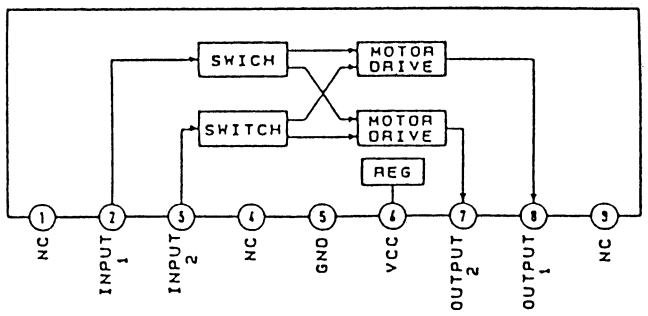

• WAVEFORM

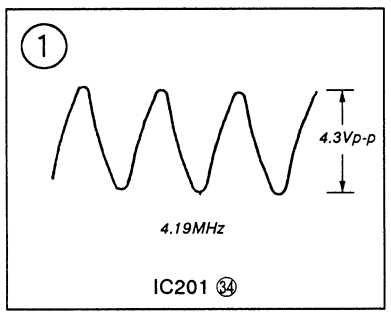

Note :

- All capacitors are in μ F unless otherwise noted. pF: μ μ F 50WV or less are not indicated except for electrolytics and tantalums.
- All resistors are in Ω and ¼W or less unless otherwise specified.
- △ : internal component.
- B+ : B+ Line
- B − : B − Line
- Voltage and waveforms are dc with respect to ground under no-signal conditions.
- Voltages are taken with a VOM (Input impedance 10M Ω). Voltage variations may be noted due to normal production tolerances.
- Waveforms are taken with a oscilloscope. Voltage variations may be noted due to normal production tolerances.
- Circled numbers refer to waveforms.
- Signal path.
  ⇨ : FM
- Abbreviation
  CND ; Canadian
  AUS : Australian
  SP : Singapore
  G : German
  MY : Malaysia
  CH : Chinese

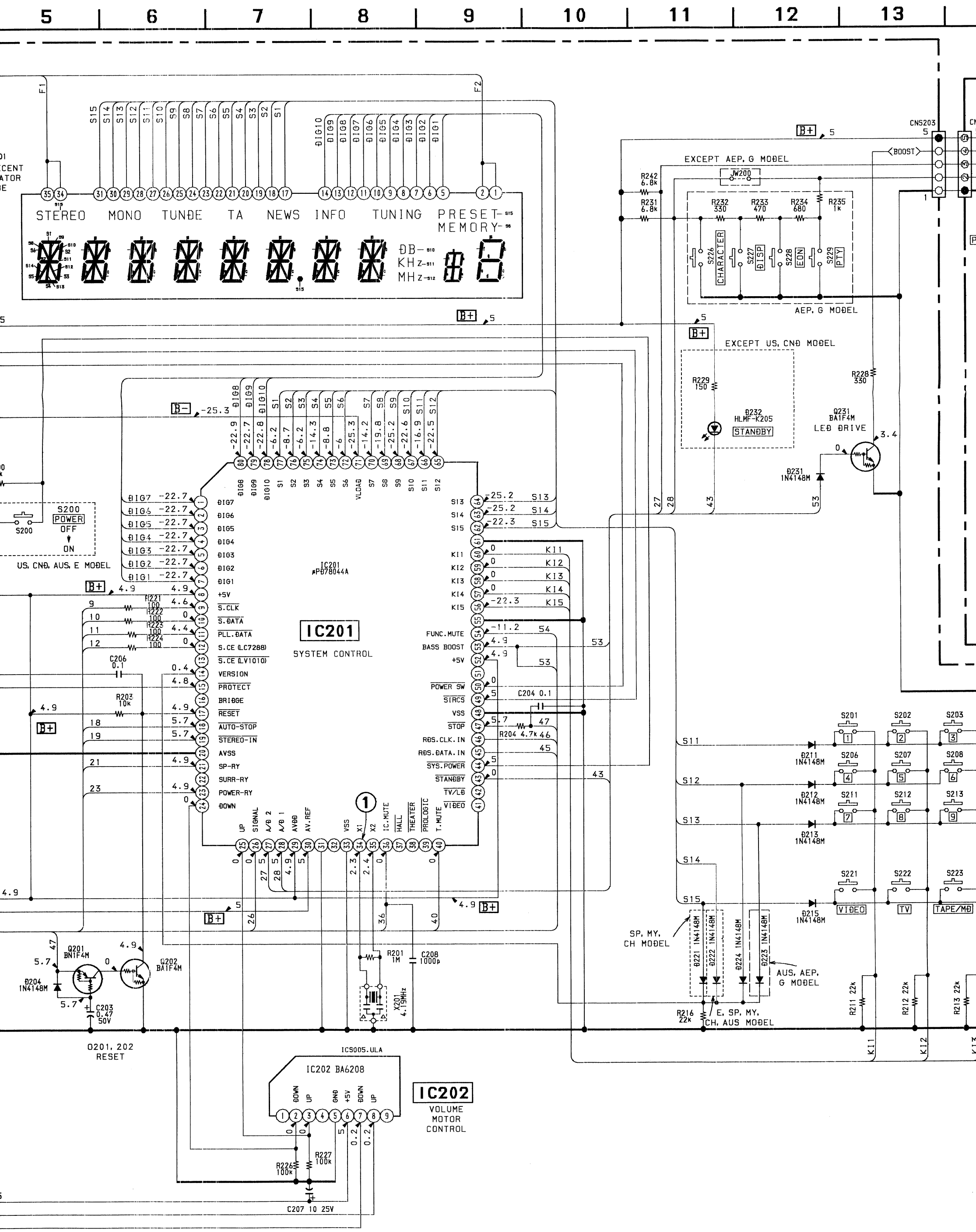
5
6
7
8
9
10
11
12
13
STEREO
MONO
TUNDE
TA
NEWS
INFO
TUNING
PRESET-
MEMORY-
DB-
KHZ-
MHZ-
CNS203
BOOST
EXCEPT AEP, G MODEL
JW200
R242 6.8k
R231 6.8k
R232 330
R233 470
R234 680
R235 1k
S226 CHARACTER
S227 DISP
S228 EON
S229 PTY
AEP, G MODEL
EXCEPT US, CND MODEL
R229 150
D232 HLMF-K205
STANDBY
R228 330
Q231 BA1F4M
LED DRIVE
D231 1N4148M
S200 POWER OFF ON
US, CND, AUS, E MODEL
IC201 μPD78044A
IC201
SYSTEM CONTROL
FUNC.MUTE
BASS BOOST
POWER SW
SIRCS
VSS
STOP
RDS.CLK.IN
RDS.DATA.IN
SYS.POWER
STANDBY
TV/LD
VIDEO
S.CLK
S.DATA
PLL.DATA
S.CE (LC7288)
S.CE (LV1010)
VERSION
PROTECT
BRIDGE
RESET
AUTO-STOP
STEREO-IN
AVSS
SP-RY
SURR-RY
POWER-RY
DOWN
R221 100
R222 100
R223 100
R224 100
C206 0.1
R203 10k
C204 0.1
R204 4.7k
R201 1M
C208 1000p
X201 4.19MHz
Q201 BN1F4M
Q202 BA1F4M
D204 1N4148M
C203 0.47 50V
Q201, 202 RESET
ICS005.ULA
IC202 BA6208
IC202
VOLUME MOTOR CONTROL
R226 100k
R227 100k
C207 10 25V
S201
S202
S203
S206
S207
S208
S211
S212
S213
S221
S222
S223
VIDEO
TV
TAPE/MD
D211 1N4148M
D212 1N4148M
D213 1N4148M
D215 1N4148M
SP, MY, CH MODEL
D221 1N4148M
D222 1N4148M
D224 1N4148M
D223 1N4148M
AUS, AEP, G MODEL
R216 22k
E, SP, MY, CH, AUS MODEL
R211 22k
R212 22k
R213 22k

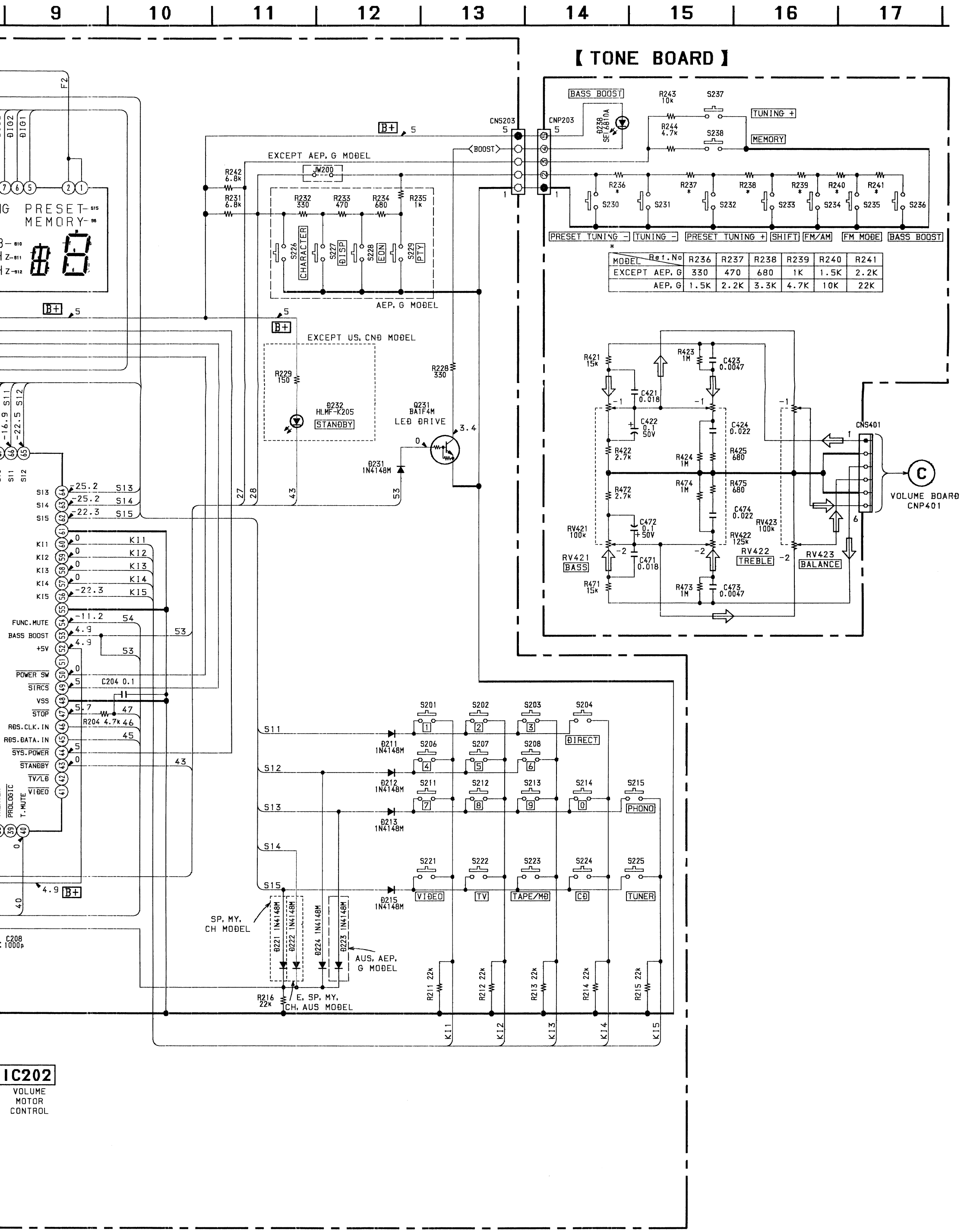

MODEL \ Ref.No	R236	R237	R238	R239	R240	R241
EXCEPT AEP, G	330	470	680	1K	1.5K	2.2K
AEP, G	1.5K	2.2K	3.3K	4.7K	10K	22K

3-5. PRINTED WIRING BOARDS (DISPLAY SECTION)

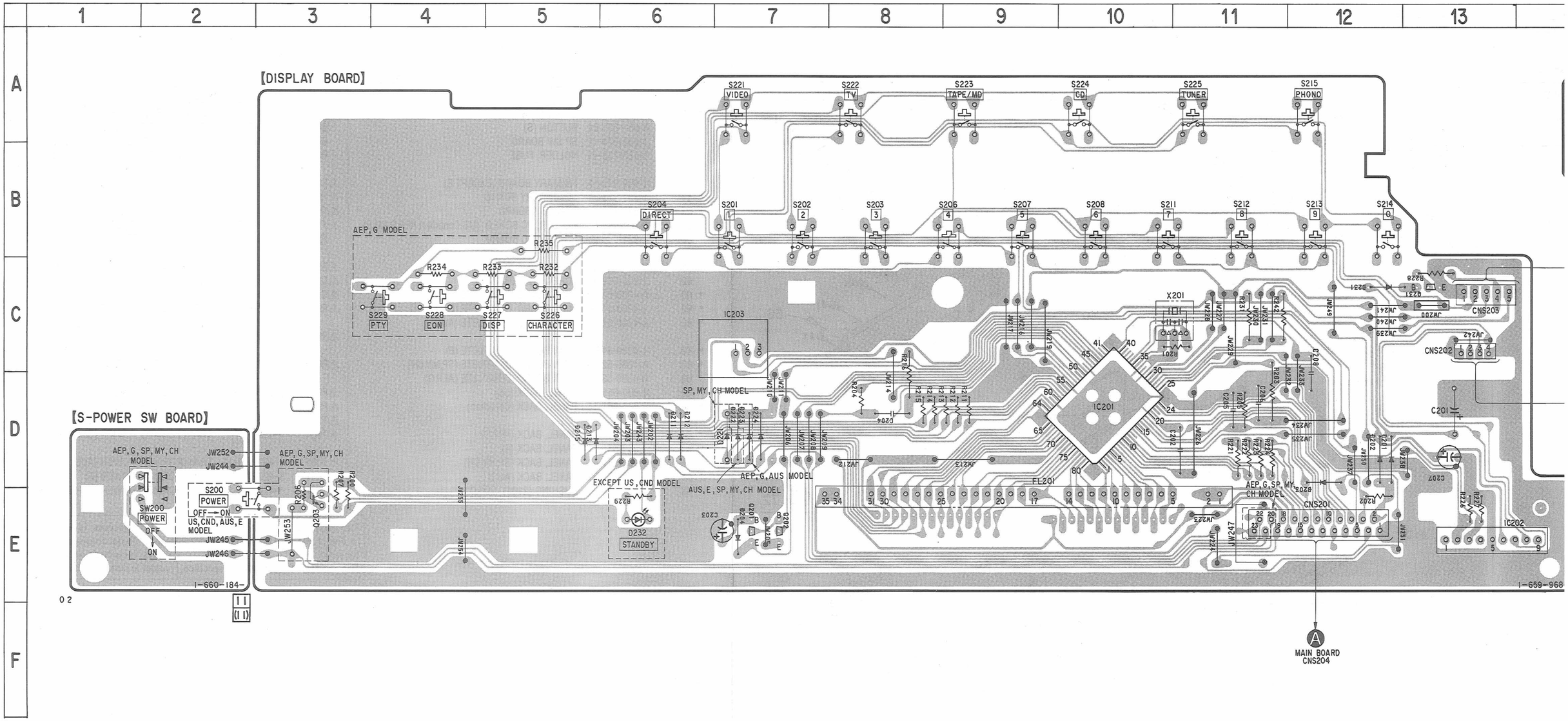

● SEMICONDUCTOR LOCATION

Ref. No.	Location	Ref. No.	Location	Ref. No.	Location
D201	D-12	D223	D-7	Q201	E-7
D202	D-12	D224	D-7	Q202	E-7
D203	D-12	D231	C-12	Q203	E-3
D204	E-7	D232	E-6	Q231	C-13
D211	D-6	D238	B-18		
D212	D-6				
D213	D-5	IC201	D-10		
D215	D-5	IC202	E-13		
D221	D-7	IC203	C-7		
D222	D-7				

Note:

- O— : parts extracted from the component side.
- ▒ : Pattern on the side which is seen.
- Abbreviation
  CND ; Canadian
  AUS : Australian
  SP : Singapore
  G : German
  MY : Malaysia
  CH : Chinese

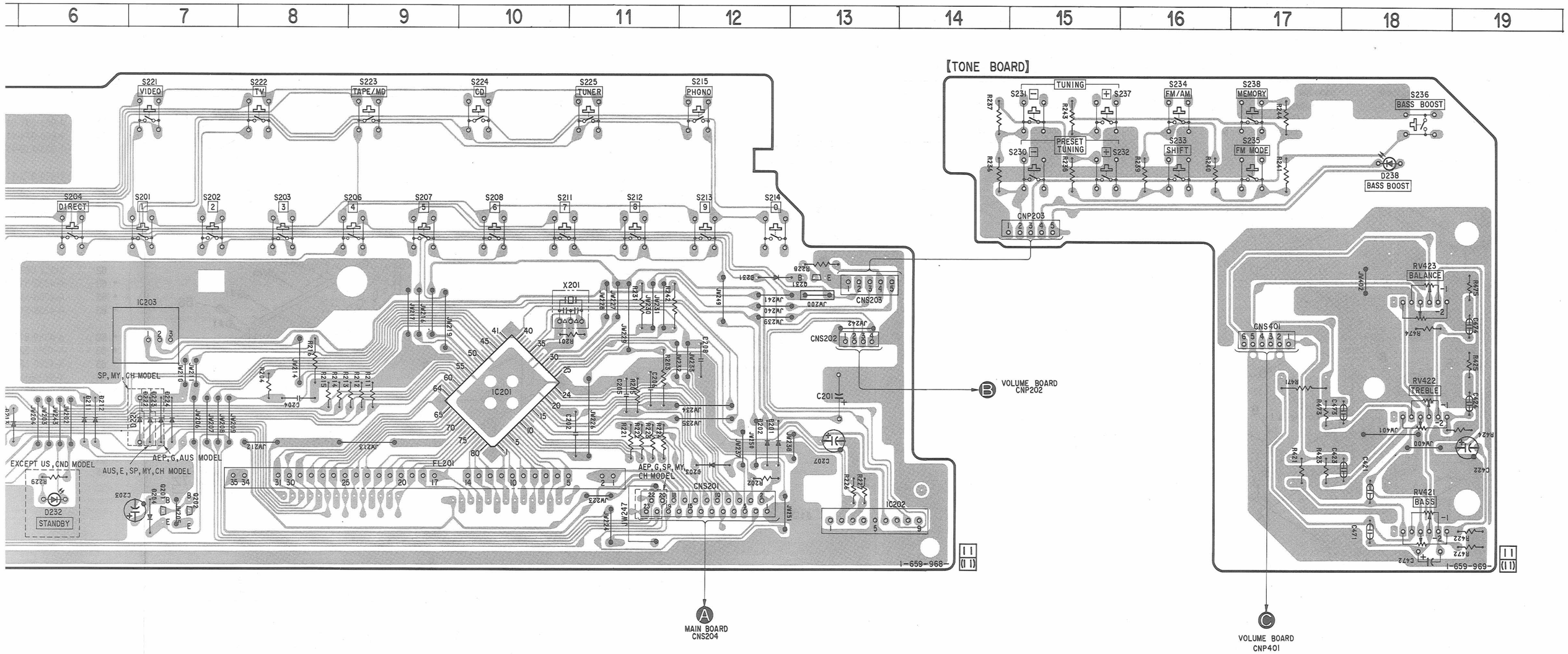

e component side.
hich is seen.

SECTION 4
EXPLODED VIEWS

NOTE :
- -XX, -X mean standardized parts, so they may have some difference from the original one.
- Items marked " * "are not stocked since they are seldom required for routine service. Some delay should be anticipated when ordering these items.
- The mechanical parts with no reference number in the exploded views are not supplied.
- Hardware (# mark) list and accessories and packing materials are given in the last of this parts list.
- Abbreviation

G	: German	AUS	: Australian
SP	: Singapore	MY	: Malaysia
CH	: Chieses		

The components identified by mark ⚠ or dotted line with mark ⚠ are critical for safety.
Replace only with part number specified.

Les composants identifiés par une marque ⚠sont critiques pour la sécurité. Ne les remplacer que par une pièce portant le numéro spécifié.

4-1. FRONT PANEL SECTION

▲ : S POWER SW board

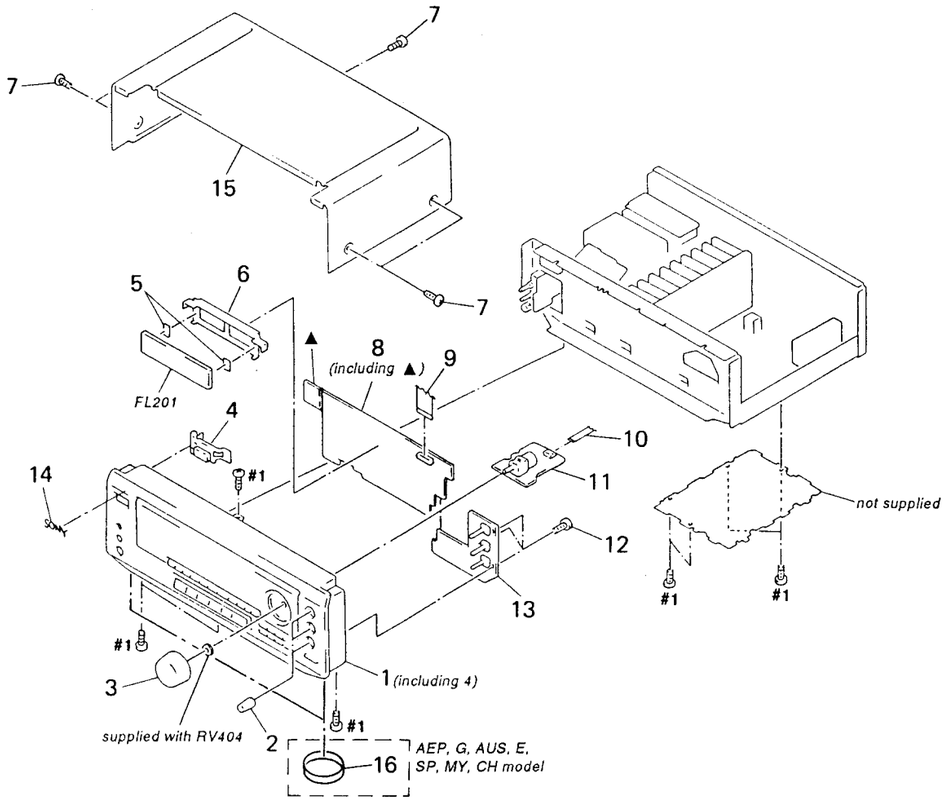

Ref. No.	Part No.	Description	Remark
1	X-4946-863-1	PANEL ASSY, FRONT (US,Canadian)	
1	X-4946-864-1	PANEL ASSY, FRONT (AUS,E)	
1	X-4946-865-1	PANEL ASSY, FRONT (AEP,G)	
1	X-4946-940-1	PANEL ASSY, FRONT (SP,MY,CH)	
2	4-980-639-01	KNOB (R14)	
3	X-4946-873-1	KNOB (R48) ASSY	
4	4-979-936-01	BUTTON (P-T) (US,Canadian,AUS,E)	
4	4-980-109-01	BUTTON (P-M) (AEP,G,SP,MY,CH)	
* 5	4-921-941-01	CUSHION (FL)	
* 6	4-943-107-11	HOLDER (FL TUBE)	
7	3-704-366-01	SCREW (CASE) (M3X8)	
* 8	A-4389-502-A	DISPLAY BOARD, COMPLETE (US,Canadian)	
* 8	A-4389-512-A	DISPLAY BOARD, COMPLETE (AUS)	
* 8	A-4389-515-A	DISPLAY BOARD, COMPLETE (E)	
* 8	A-4389-519-A	DISPLAY BOARD, COMPLETE (SP,MY,CH)	
* 8	A-4389-523-A	DISPLAY BOARD, COMPLETE (AEP,G)	
9	1-765-343-11	WIRE (FLAT TYPE) (23 CORE) (AEP,G,SP,MY,CH)	
9	1-773-114-11	WIRE (FLAT TYPE) (19 CORE) (US,Canadian,AUS,E)	
10	1-769-941-11	WIRE (FLAT TYPE) (11 CORE)	
* 11	A-4389-504-A	VOLUME BOARD, COMPLETE	
12	4-951-620-01	SCREW (2.6X8), +BVTP	
* 13	A-4389-505-A	TONE BOARD, COMPLETE (EXCEPT AEP,G)	
* 13	A-4389-526-A	TONE BOARD, COMPLETE (AEP,G)	
14	4-963-404-21	EMBLEM (5-A), SONY	
* 15	4-980-658-01	CASE (413226)	
16	4-977-593-11	RING (DIA. 50), ORNAMENTAL (AEP,G,AU,E,SP,MY,CH)	
FL201	1-517-141-11	INDICATOR TUBE, FLUORESCENT	

4-2. CHASSIS SECTION

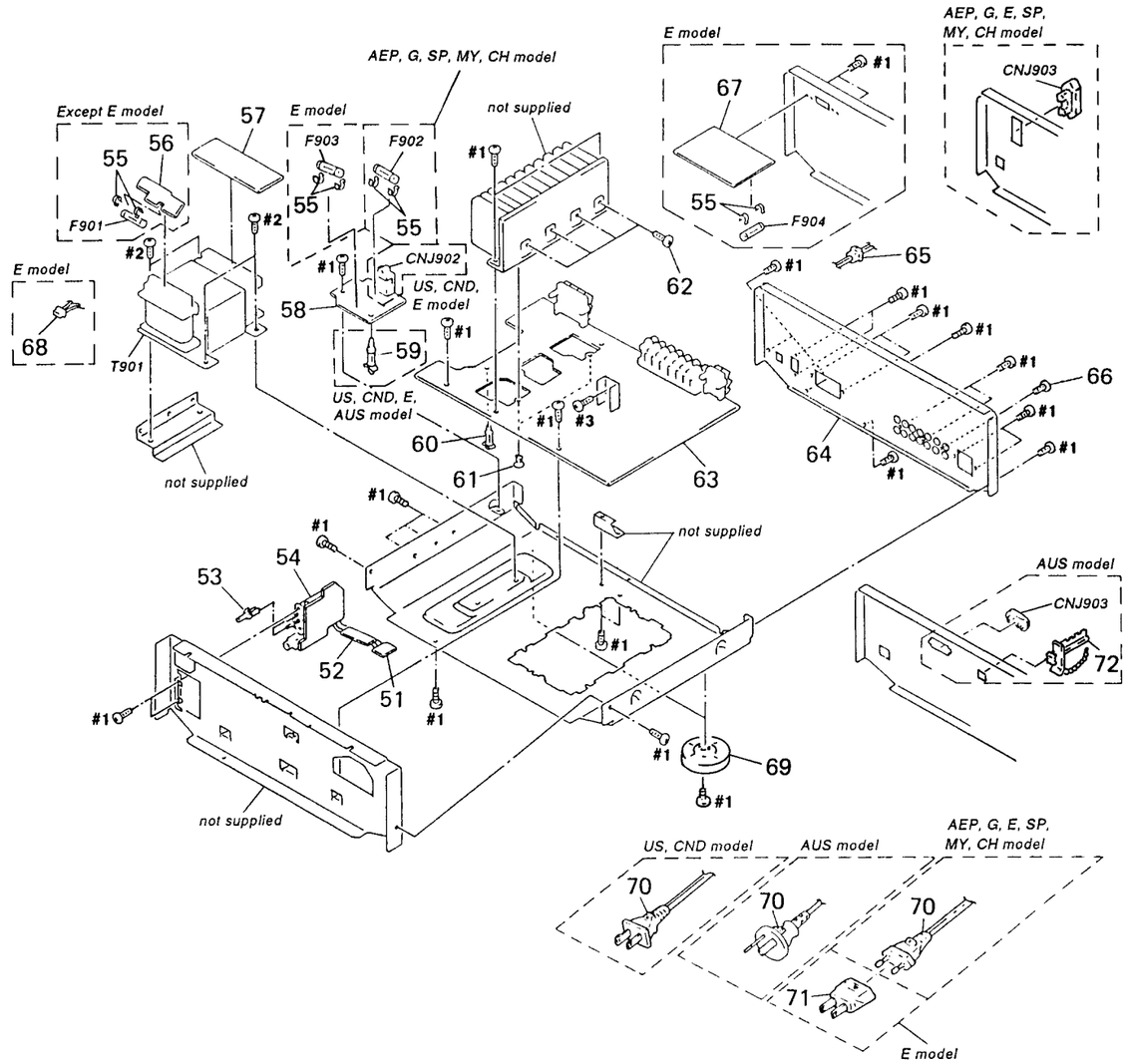

Ref. No.	Part No.	Description	Remark
* 51	1-659-976-11	[illegible]	
* 52	1-659-975-11	[illegible]	
53	4-951-801-01	[illegible]	
* 54	1-659-974-11	[illegible]	
55	1-533-233-11	[illegible]	
* 56	1-659-972-11	[illegible]	
* 57	1-659-973-11	[illegible]	
* 58	1-659-970-11	[illegible]	
59	4-924-098-01	[illegible]	
* 60	4-924-098-21	[illegible]	
61	4-812-134-00	[illegible]	
62	3-905-609-01	[illegible]	
* 63	A-4389-510-A	[illegible]	
* 63	A-4389-511-A	[illegible]	
* 63	A-4389-514-A	[illegible]	
* 63	A-4389-518-A	[illegible]	
* 63	A-4389-522-A	[illegible]	
* 63	A-4389-531-A	[illegible]	
* 64	4-980-651-01	[illegible]	
* 64	4-980-651-11	[illegible]	
* 64	4-980-651-21	[illegible]	
* 64	4-980-651-31	[illegible]	
* 64	4-980-651-41	[illegible]	
* 64	4-980-651-51	[illegible]	
* 65	3-703-244-00	[illegible]	

by mark ⚠
are critical
er specified.
és par une
la sécurité.
une pièce

Remark
)
,SP,MY,CH)
adian,AUS,E)
EP,G)
E,SP,MY,CH)

4-2. CHASSIS SECTION

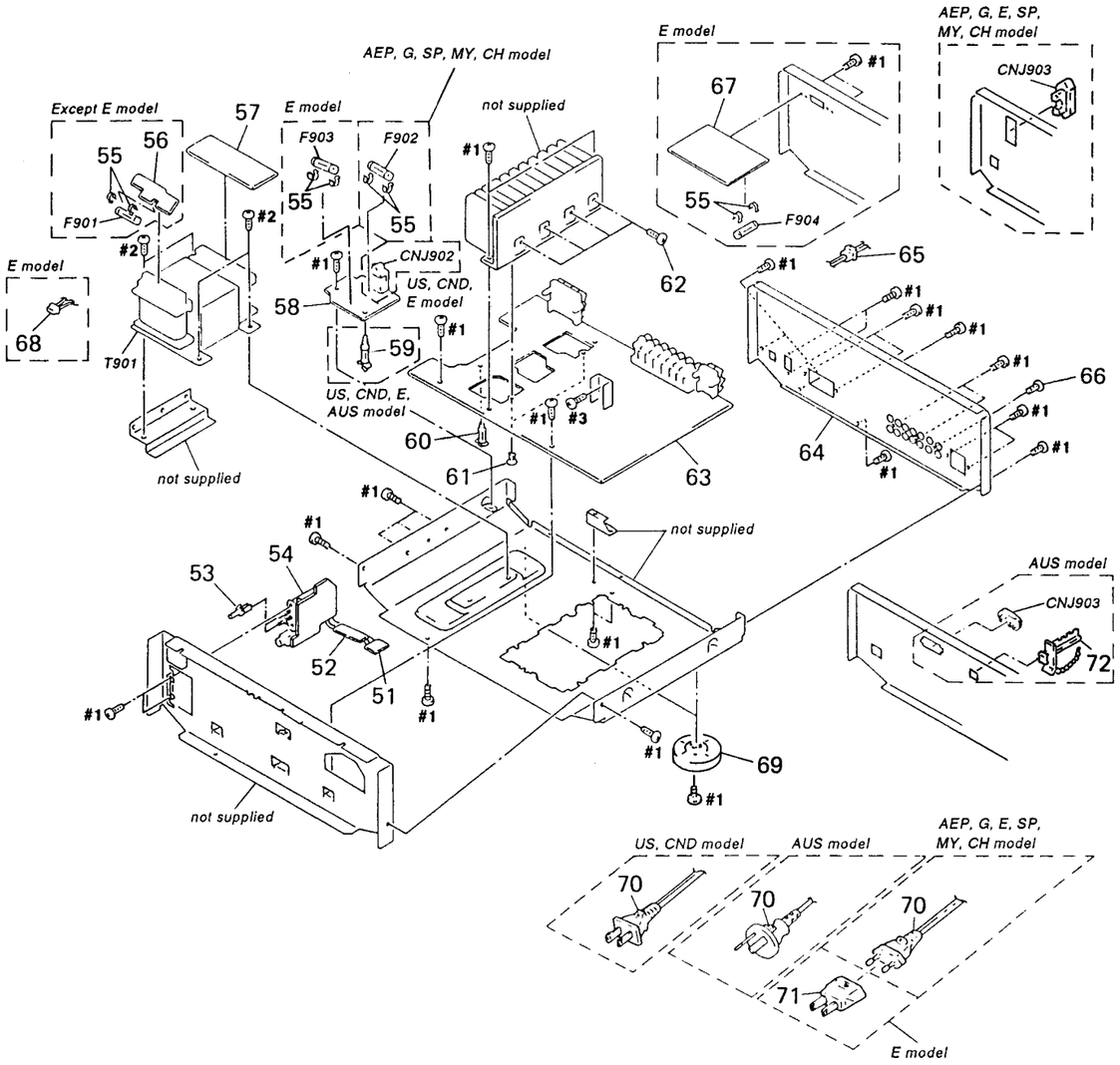

Ref. No.	Part No.	Description	Remark
* 51	1-659-976-11	SP SW (B) BOARD	
* 52	1-659-975-11	SP SW (A) BOARD	
53	4-951-801-01	BUTTON (S)	
* 54	1-659-974-11	SP SW BOARD	
55	1-533-233-11	HOLDER, FUSE	
* 56	1-659-972-11	PRIMARY BOARD (EXCEPT E)	
* 57	1-659-973-11	SECONDARY BOARD	
* 58	1-659-970-11	STANDBY BOARD	
59	4-924-098-01	HOLDER, PC BOARD	(US,Canadian,AEP,G,AU,E)
* 60	4-924-098-21	HOLDER, PC BOARD	
61	4-812-134-00	RIVET (DIA. 3.5), NYLON	
62	3-905-609-01	SCREW (TRANSISTOR)	
* 63	A-4389-510-A	MAIN BOARD, COMPLETE (US)	
* 63	A-4389-511-A	MAIN BOARD, COMPLETE (Canadian)	
* 63	A-4389-514-A	MAIN BOARD, COMPLETE (AUS)	
* 63	A-4389-518-A	MAIN BOARD, COMPLETE (E)	
* 63	A-4389-522-A	MAIN BOARD, COMPLETE (SP,MY,CH)	
* 63	A-4389-531-A	MAIN BOARD, COMPLETE (AEP,G)	
* 64	4-980-651-01	PANEL, BACK (US)	
* 64	4-980-651-11	PANEL, BACK (Canadian)	
* 64	4-980-651-21	PANEL, BACK (AEP,G)	
* 64	4-980-651-31	PANEL, BACK (E)	
* 64	4-980-651-41	PANEL, BACK (SP,MY,CH)	
* 64	4-980-651-51	PANEL, BACK (AUS)	
* 65	3-703-244-00	BUSHING (2104), CORD	

Ref. No.	Part No.	Description	Remark
66	4-909-982-11	SCREW, TAPPING	
* 67	1-659-978-11	VOLTAGE SELECTOR BOARD (E)	
68	1-769-746-61	LEAD (WITH CONNECTOR) (2 CORE) (E)	
69	X-4947-207-1	FOOT ASSY (F50150S) (AEP,G,AU,E,SP,MY,CH)	
69	X-4947-208-1	FOOT ASSY (F50150S) (US,Canadian)	
⚠70	1-696-847-11	CORD, POWER (AUS)	
⚠70	1-769-743-11	CORD, POWER (US,Canadian)	
⚠70	1-769-744-11	CORD, POWER (AEP,G,E,SP,MY,CH)	
⚠71	1-569-008-21	ADAPTOR, CONVERSION 2P (E)	
72	4-956-370-12	BAND, PLUG FIXED (AUS)	
⚠CNJ902	1-540-057-11	OUTLET, AC (POLAR) (US,Canadian,E)	
⚠CNJ903	1-251-416-11	OUTLET, A.C. (AUS)	
⚠CNJ903	1-526-794-11	OUTLET, AC (AEP,G,E,SP,MY,CH)	
⚠F901	1-532-388-51	FUSE FUSE,TIME LAG(T2AL/250V)	(EXCEPT US,Canadian)
⚠F901	1-576-109-11	FUSE (5A/250V) (US,Canadian)	
⚠F902	1-532-464-51	FUSE FUSE,TIME LAG(T2AL/250V)	(AEP,G,SP,MY,CH)
⚠F903	1-532-388-51	FUSE,TIME LAG(T2AL/250V) (E)	
⚠F904	1-532-388-51	FUSE,TIME LAG(T2AL/250V) (E)	
⚠T901	1-429-516-11	TRANSFORMER, POWER (US)	
⚠T901	1-429-517-11	TRANSFORMER, POWER (Canadian)	
⚠T901	1-429-518-11	TRANSFORMER, POWER (AUS)	
⚠T901	1-429-519-11	TRANSFORMER, POWER (E)	
⚠T901	1-429-520-11	TRANSFORMER, POWER (AEP,G,SP,MY,CH)	

The components identified by mark ⚠ or dotted line with mark ⚠ are critical for safety. Replace only with part number specified.	Les composants identifiés par une marque ⚠sont critiques pour la sécurité. Ne les remplacer que par une pièce portant le numéro spécifié.

SECTION 5
ELECTRICAL PARTS LIST

DISPLAY **S POWER SW**

NOTE :
- Due to standardization, replacements in the parts list may be different from the parts specified in the diagrams or the components used on the set.
- -XX, -X mean standardized parts, so they may have some difference from the original one.
- RESISTORS
  All resistors are in ohms
  METAL : Metal-film resistor
  METAL OXIDE :Metal oxide-film resistor
  F : nonflammable
- Items marked " * "are not stocked since they are seldom required for routine service. Some delay should be anticipated when ordering these items.

- SEMICONDUCTORS
  In each case, u : μ , for example :
  uA.... : μ A.... , uPA.... : μ PA....
  uPB.... : μ PB.... , uPC.... : μ PC....
  uPD.... : μ PD....
- CAPACITORS
  uF : μ F
- COILS
  uH : μ H
- Abbreviation
  G : German AUS : Australian
  SP : Singapore MY : Malaysia
  CH : Chieses

The components identified by mark ⚠ or dotted line with mark ⚠ are critical for safety.
Replace only with part number specified.

Les composants identifiés par une marque ⚠sont critiques pour la sécurité. Ne les remplacer que par une pièce portant le numéro spécifié.

When indicating parts by reference number, please include the board.

Ref. No.	Part No.	Description			Remark
*	A-4389-502-A	DISPLAY BOARD, COMPLETE (US,Canadian)			
*	A-4389-512-A	DISPLAY BOARD, COMPLETE (AUS)			
*	A-4389-515-A	DISPLAY BOARD, COMPLETE (E)			
*	A-4389-519-A	DISPLAY BOARD, COMPLETE (SP,MY,CH)			
*	A-4389-523-A	DISPLAY BOARD, COMPLETE (AEP,G)			
		**********			
		S POWER SW BOARD			
		**********			
*	4-921-941-01	CUSHION (FL)			
*	4-943-107-11	HOLDER (FL TUBE)			
		< CAPACITOR >			
C201	1-104-905-11	CAPACITOR	0.22F		5.5V
C202	1-164-159-11	CERAMIC	0.1uF		50V
C203	1-124-465-00	ELECT	0.47uF	20%	50V
C204	1-164-159-11	CERAMIC	0.1uF		50V
C205	1-162-294-31	CERAMIC	0.001uF	10%	50V
C206	1-164-159-11	CERAMIC	0.1uF		50V
C207	1-126-096-11	ELECT	10uF	20%	35V
C208	1-162-294-31	CERAMIC	0.001uF	10%	50V
		< CONNECTOR >			
CNS201	1-568-741-11	SOCKET, CONNECTOR 23P (AEP,G,SP,MY,CH)			
CNS201	1-569-308-11	SOCKET, CONNECTOR (L TYRE) 19P (US,Canadian,AUS,E)			
CNS202	1-770-397-11	HOUSING, CONNECTOR(PC BOARD)4P			
* CNS203	1-565-481-11	CONNECTOR, BOARD TO BOARD 5P			
		< DIODE >			
D201	8-719-815-85	DIODE 1S1585 (AEP,G)			
D201	8-719-987-63	DIODE 1N4148M (EXCEPT AEP,G)			
D202	8-719-815-85	DIODE 1S1585 (AEP,G)			
D202	8-719-987-63	DIODE 1N4148M (EXCEPT AEP,G)			
D203	8-719-815-85	DIODE 1S1585 (AEP,G)			
D203	8-719-987-63	DIODE 1N4148M (EXCEPT AEP,G)			
D204	8-719-815-85	DIODE 1S1585 (AEP,G)			
D204	8-719-987-63	DIODE 1N4148M (EXCEPT AEP,G)			
D211	8-719-815-85	DIODE 1S1585 (AEP,G)			
D211	8-719-987-63	DIODE 1N4148M (EXCEPT AEP,G)			
D212	8-719-815-85	DIODE 1S1585 (AEP,G)			
D212	8-719-987-63	DIODE 1N4148M (EXCEPT AEP,G)			
D213	8-719-815-85	DIODE 1S1585 (AEP,G)			
D213	8-719-987-63	DIODE 1N4148M (EXCEPT AEP,G)			
D215	8-719-815-85	DIODE 1S1585 (AEP,G)			
D215	8-719-987-63	DIODE 1N4148M (EXCEPT AEP,G)			
D221	8-719-987-63	DIODE 1N4148M (SP,MY,CH)			
D222	8-719-987-63	DIODE 1N4148M (AUS,E,SP,MY,CH)			
D223	8-719-987-63	DIODE 1N4148M (AUSS)			
D223	8-719-815-85	DIODE 1S1585 (AEP,G)			
D224	8-719-815-85	DIODE 1S1585 (AEP,G)			
D224	8-719-987-63	DIODE 1N4148M (EXCEPT AEP,G)			
D231	8-719-815-85	DIODE 1S1585 (AEP,G)			
D231	8-719-987-63	DIODE 1N4148M (EXCEPT AEP,G)			
D232	8-719-057-30	LED HLMF-K205-2UL (STANDBY) (AUS,E,SP,MY,CH)			
D232	8-719-313-48	LED SEL621 0S-TH12 (STANDBY) (AEP,G)			
		< INDICATOR TUBE >			
FL201	1-517-141-11	INDICATOR TUBE, FLUORESCENT			
		< IC >			
IC201	8-759-426-91	IC uPD78044AGF-191-3B9 (AEP,G)			
IC201	8-759-385-78	IC uPD78044AGF-165-3B9 (EXCEPT AEP,G)			
IC202	8-759-962-08	IC BA6208			
IC203	8-749-012-72	IC GP1U58X			
		< TRANSISTOR >			
Q201	8-729-900-63	TRANSISTOR DTA124ES			
Q202	8-729-900-36	TRANSISTOR DTC124ES			
Q203	8-729-900-36	TRANSISTOR DTC124ES (AEP,G,SP,MY,CH)			
Q231	8-729-900-36	TRANSISTOR DTC124ES			
		< RESISTOR >			
R200	1-249-433-11	CARBON	22K	5%	1/4W

Ref. No.	Part No.	Description			Remark
R201	1-247-903-00	CARBON	1M	5%	1/4W
R202	1-249-429-11	CARBON	10K	5%	1/4W
R203	1-249-429-11	CARBON	10K	5%	1/4W
R204	1-249-425-11	CARBON	4.7K	5%	1/4W
R205	1-249-441-11	CARBON	100K	5%	1/4W
R206	1-249-429-11	CARBON	10K	5%	1/4W (AEP,G,SP,MY,CH)
R207	1-249-429-11	CARBON	10K	5%	1/4W
R211	1-249-433-11	CARBON	22K	5%	1/4W
R212	1-249-433-11	CARBON	22K	5%	1/4W
R213	1-249-433-11	CARBON	22K	5%	1/4W
R214	1-249-433-11	CARBON	22K	5%	1/4W
R215	1-249-433-11	CARBON	22K	5%	1/4W
R216	1-249-433-11	CARBON	22K	5%	1/4W
R221	1-247-807-31	CARBON	100	5%	1/4W
R222	1-247-807-31	CARBON	100	5%	1/4W
R223	1-247-807-31	CARBON	100	5%	1/4W
R224	1-247-807-31	CARBON	100	5%	1/4W
R226	1-249-441-11	CARBON	100K	5%	1/4W
R227	1-249-441-11	CARBON	100K	5%	1/4W
R228	1-249-411-11	CARBON	330	5%	1/4W
R229	1-249-407-11	CARBON	150	5%	1/4W (EXCEPT US,Canadian)
R231	1-249-427-11	CARBON	6.8K	5%	1/4W
R232	1-249-411-11	CARBON	330	5%	1/4W (AEP,G)
R233	1-249-413-11	CARBON	470	5%	1/4W (AEP,G)
R234	1-249-415-11	CARBON	680	5%	1/4W (AEP,G)
R235	1-249-417-11	CARBON	1K	5%	1/4W (AEP,G)
R242	1-249-427-11	CARBON	6.8K	5%	1/4W
R425	1-249-415-11	CARBON	680	5%	1/4W
		< SWITCH >			
S200	1-554-303-21	SWITCH, TACTILE (POWER) (US,Canadian,AUS,E)			
S201	1-554-303-21	SWITCH, TACTILE (1)			
S202	1-554-303-21	SWITCH, TACTILE (2)			
S203	1-554-303-21	SWITCH, TACTILE (3)			
S204	1-554-303-21	SWITCH, TACTILE (DIRECT)			
S206	1-554-303-21	SWITCH, TACTILE (4)			
S207	1-554-303-21	SWITCH, TACTILE (5)			
S208	1-554-303-21	SWITCH, TACTILE (6)			
S211	1-554-303-21	SWITCH, TACTILE (7)			
S212	1-554-303-21	SWITCH, TACTILE (8)			
S213	1-554-303-21	SWITCH, TACTILE (9)			
S214	1-554-303-21	SWITCH, TACTILE (0)			
S215	1-554-303-21	SWITCH, TACTILE (PHONO)			
S221	1-554-303-21	SWITCH, TACTILE (VIDEO)			
S222	1-554-303-21	SWITCH, TACTILE (TV)			
S223	1-554-303-21	SWITCH, TACTILE (TAPE/MD)			
S224	1-554-303-21	SWITCH, TACTILE (CD)			
S225	1-554-303-21	SWITCH, TACTILE (TUNER)			
S226	1-554-303-21	SWITCH, TACTILE (CHARACTER) (AEP,G)			
S227	1-554-303-21	SWITCH, TACTILE (DISP) (AEP,G)			
S228	1-554-303-21	SWITCH, TACTILE (EON) (AEP,G)			
S229	1-554-303-21	SWITCH, TACTILE (PTY) (AEP,G)			
SW200	1-554-118-00	SWITCH, PUSH (1 KEY) (POWER) (AEP,G,SP,MY,CH)			
		< VIBRATOR >			
X201	1-577-101-11	VIBRATOR, CERAMIC (4.19MHz)			
**********					
*	A-4389-510-A	MAIN BOARD, COMPLETE (US)			
*	A-4389-511-A	MAIN BOARD, COMPLETE (Canadian)			
*	A-4389-514-A	MAIN BOARD, COMPLETE (AUS)			
*	A-4389-518-A	MAIN BOARD, COMPLETE (E)			
*	A-4389-522-A	MAIN BOARD, COMPLETE (SP,MY,CH)			
*	A-4389-531-A	MAIN BOARD, COMPLETE (AEP,G)			
		**********			
	3-905-609-01	SCREW (TRANSISTOR)			
	4-812-134-00	RIVET (DIA. 3.5), NYLON			
	7-685-646-79	SCREW +BVTP 3X8 TYPE2 N-S (US,Canadian)			
	7-682-548-04	SCREW +BVTT 3X8 (S)			
		< CAPACITOR >			
C1	1-126-964-11	ELECT	10uF	20%	50V (AEP,G)
C2	1-162-306-11	CERAMIC	0.01uF	30%	16V (AEP,G)
C3	1-162-288-31	CERAMIC	330PF	10%	50V (AEP,G)
C4	1-124-925-11	ELECT	2.2uF	20%	100V (AEP,G)
C5	1-162-306-11	CERAMIC	0.01uF	30%	16V (AEP,G)
C6	1-162-291-31	CERAMIC	560PF	10%	50V (AEP,G)
C7	1-102-527-11	CERAMIC	82PF	5%	50V (AEP,G)
C8	1-102-852-91	CERAMIC	47PF	5%	50V (AEP,G)
C353	1-164-159-11	CERAMIC	0.1uF		50V
C354	1-164-159-11	CERAMIC	0.1uF		50V
C363	1-164-159-21	CERAMIC	0.1uF		50V (AEP,G)
C401	1-162-286-21	CERAMIC	220PF	10%	50V (AEP,G)
C401	1-162-282-31	CERAMIC	100PF	10%	50V (EXCEPT AEP,G)
C402	1-126-962-11	ELECT	3.3uF	20%	50V
C403	1-126-966-11	ELECT	33uF	20%	16V
C404	1-162-286-21	CERAMIC	220PF	10%	50V (AEP,G)
C404	1-162-282-31	CERAMIC	100PF	10%	50V (EXCEPT AEP,G)

Ref. No.	Part No.	Description			Remark
C405	1-137-459-11	FILM	0.0056uF	5%	100V
C406	1-164-159-11	CERAMIC	0.1uF		50V
C407	1-137-365-11	FILM	0.0015uF	5%	50V
C408	1-162-294-31	CERAMIC	0.001uF	10%	50V
C409	1-126-962-11	ELECT	3.3uF	20%	50V
C410	1-164-159-11	CERAMIC	0.1uF		50V
C412	1-162-291-31	CERAMIC	560PF	10%	50V
C413	1-164-159-11	CERAMIC	0.1uF		50V
C415	1-164-159-11	CERAMIC	0.1uF		50V
C416	1-164-159-11	CERAMIC	0.1uF		50V
C421	1-126-964-11	ELECT	10uF	20%	50V
C422	1-124-903-11	ELECT	1uF	20%	50V
C434	1-162-286-31	CERAMIC	220PF	10%	50V
C435	1-162-286-31	CERAMIC	220PF	10%	50V
C451	1-162-286-21	CERAMIC	220PF	10%	50V (AEP,G)
C451	1-162-282-31	CERAMIC	100PF	10%	50V (EXCEPT AEP,G)
C452	1-126-962-11	ELECT	3.3uF	20%	50V
C453	1-126-966-11	ELECT	33uF	20%	16V
C454	1-162-286-21	CERAMIC	220PF	10%	50V (AEP,G)
C454	1-162-282-31	CERAMIC	100PF	10%	50V (EXCEPT AEP,G)
C455	1-137-459-11	FILM	0.0056uF	5%	100V
C457	1-137-365-11	FILM	0.0015uF	5%	50V
C459	1-126-962-11	ELECT	3.3uF	20%	50V
C460	1-164-159-11	CERAMIC	0.1uF		50V
C471	1-126-964-11	ELECT	10uF	20%	50V
C472	1-124-903-11	ELECT	1uF	20%	50V
C701	1-126-963-11	ELECT	4.7uF	20%	50V
C702	1-102-973-00	CERAMIC	100PF	5%	50V
C703	1-126-933-11	ELECT	100uF	20%	10V
C705	1-102-233-00	CERAMIC	33PF	10%	500V
C710	1-126-967-11	ELECT	47uF	20%	16V
C711	1-137-372-11	FILM	0.022uF	5%	50V
C720	1-162-286-31	CERAMIC	220PF	10%	50V
C721	1-126-923-11	ELECT	220uF	20%	10V
C722	1-126-965-11	ELECT	22uF	20%	50V
C740	1-162-286-31	CERAMIC	220PF	10%	50V (AUS)
C740	1-128-563-11	ELECT	100uF	20%	100V (EXCEPT AUS)
C741	1-128-563-11	ELECT	100uF	20%	100V
C742	1-126-923-11	ELECT	220uF	20%	10V
C751	1-126-963-11	ELECT	4.7uF	20%	50V
C752	1-102-973-00	CERAMIC	100PF	5%	50V
C753	1-126-933-11	ELECT	100uF	20%	10V
C755	1-102-233-00	CERAMIC	33PF	10%	500V
C760	1-126-967-11	ELECT	47uF	20%	16V
C761	1-137-372-11	FILM	0.022uF	5%	50V
C770	1-162-286-31	CERAMIC	220PF	10%	50V
C799	1-164-159-21	CERAMIC	0.1uF		50V (AEP,G)
C801	1-104-664-11	ELECT	47uF	20%	25V
C802	1-104-664-11	ELECT	47uF	20%	25V
C803	1-107-766-12	ELECT	8200uF	20%	71V (Canadian,AUS,E)
C803	1-125-474-12	ELECT(BLOCK)	8200uF	20%	56V (AEP,G,SP,MY,CH)
C803	1-109-932-11	ELECT	10000uF	20%	71V (US)
C804	1-107-766-12	ELECT	8200uF	20%	71V (Canadian,AUS,E)
C804	1-125-474-12	ELECT(BLOCK)	8200uF	20%	56V (AEP,G,SP,MY,CH)
C804	1-109-932-11	ELECT	10000uF	20%	71V (US)
C805	1-130-781-00	FILM	0.22uF	10%	100V (AEP,G,AUS)
C805	1-137-420-11	FILM	0.047uF	10%	100V (US,Canadian,E,SP,MY,CH)
C806	1-130-781-00	FILM	0.22uF	10%	100V (AEP,G,AUS)
C806	1-137-420-11	FILM	0.047uF	10%	100V (US,Canadian,E,SP,MY,CH)
C807	1-104-664-11	ELECT	47uF	20%	25V (AEP,G)
C807	1-124-903-11	ELECT	1uF	20%	50V (EXCEPT AEP,G)
C808	1-104-664-11	ELECT	47uF	20%	25V
C809	1-124-903-11	ELECT	1uF	20%	50V (AEP,G)
C809	1-104-664-11	ELECT	47uF	20%	25V (EXCEPT AEP,G)
C810	1-124-903-11	ELECT	1uF	20%	50V
C811	1-126-951-11	ELECT	470uF	20%	35V
C812	1-126-951-11	ELECT	470uF	20%	35V
C813	1-164-088-11	CERAMIC	0.001uF		50V
C814	1-164-088-11	CERAMIC	0.001uF		50V
C815	1-126-947-11	ELECT	47uF	20%	35V
C816	1-126-947-11	ELECT	47uF	20%	35V
C820	1-161-494-00	CERAMIC	0.022uF		25V
C821	1-161-494-00	CERAMIC	0.022uF		25V
C898	1-124-903-11	ELECT	1uF	20%	50V
C950	1-126-952-11	ELECT	1000uF	20%	16V
C951	1-164-097-11	CERAMIC	0.022uF		50V
C952	1-124-903-11	ELECT	1uF	20%	50V
C953	1-124-464-11	ELECT	0.22uF	20%	50V
C954	1-126-964-11	ELECT	10uF	20%	50V
C956	1-164-159-11	CERAMIC	0.1uF		50V

MAIN

Ref. No.	Part No.	Description			Remark
CC01	1-162-282-31	CERAMIC	100PF	10%	50V (AEP,G)
CC02	1-162-282-31	CERAMIC	100PF	10%	50V (AEP,G)
CC03	1-162-282-31	CERAMIC	100PF	10%	50V (AEP,G)
CC04	1-162-282-31	CERAMIC	100PF	10%	50V (AEP,G)
CC05	1-162-282-31	CERAMIC	100PF	10%	50V (AEP,G)
CC06	1-162-282-31	CERAMIC	100PF	10%	50V (AEP,G)
CC07	1-162-282-31	CERAMIC	100PF	10%	50V (AEP,G)
CC12	1-164-096-11	CERAMIC	0.01uF		50V (AEP,G)
CC13	1-164-096-11	CERAMIC	0.01uF		50V (AEP,G)
CC51	1-162-282-31	CERAMIC	100PF	10%	50V (AEP,G)
CC52	1-162-282-31	CERAMIC	100PF	10%	50V (AEP,G)
CC53	1-162-282-31	CERAMIC	100PF	10%	50V (AEP,G)
CC54	1-162-282-31	CERAMIC	100PF	10%	50V (AEP,G)
CC55	1-162-282-31	CERAMIC	100PF	10%	50V (AEP,G)
CC56	1-162-282-31	CERAMIC	100PF	10%	50V (AEP,G)
CC57	1-162-282-31	CERAMIC	100PF	10%	50V (AEP,G)
CC62	1-164-096-11	CERAMIC	0.01uF		50V (AEP,G)
CC63	1-164-096-11	CERAMIC	0.01uF		50V (AEP,G)
		< CONNECTOR >			
CNP404	1-569-060-11	SOCKET, CONNECTOR 11P			
CNP404	1-695-094-11	SOCKET, CONNECTOR 11P (EXCEPT AEP,G)			
CNP702	1-770-481-11	PIN, CONNECTOR 4P			
CNP706	1-764-477-11	PIN, CONNECTOR (PC BOARD) 8P			
CNS204	1-568-742-11	SOCKET, CONNECTOR 23P (AEP,G,SP,MY,CH)			
CNS204	1-569-323-11	SOCKET, CONNECTOR 19P (US,Canadian,AUS,E)			
CNS802	1-766-200-11	SOCKET, CONNECTOR PIN 5P			
		< DIODE >			
D710	8-719-815-85	DIODE 1S1585 (AEP,G)			
D710	8-719-987-63	DIODE 1N4148M (EXCEPT AEP,G)			
D721	8-719-815-85	DIODE 1S1585			
D722	8-719-815-85	DIODE 1S1585			
D723	8-719-815-85	DIODE 1S1585 (AEP,G)			
D723	8-719-987-63	DIODE 1N4148M (EXCEPT AEP,G)			

Ref. No.	Part No.	Description	Remark
D724	8-719-815-85	DIODE 1S1585 (AEP,G)	
D724	8-719-987-63	DIODE 1N4148M (EXCEPT AEP,G)	
D801	8-719-002-33	DIODE UZL-24L	
D802	8-719-302-38	DIODE RBV-602-01	
D804	8-719-010-38	DIODE UZ-5.1BSB	
D805	8-719-002-33	DIODE UZL-24L	
D810	8-719-200-82	DIODE 11ES2	
D811	8-719-200-82	DIODE 11ES2	
D812	8-719-200-82	DIODE 11ES2	
D813	8-719-200-82	DIODE 11ES2	
D814	8-719-815-85	DIODE 1S1585 (AEP,G)	
D814	8-719-987-63	DIODE 1N4148M (EXCEPT AEP,G)	
D815	8-719-815-85	DIODE 1S1585 (AEP,G)	
D815	8-719-987-63	DIODE 1N4148M (EXCEPT AEP,G)	
D820	8-719-200-82	DIODE 11ES2	
D821	8-719-200-82	DIODE 11ES2	
D822	8-719-200-82	DIODE 11ES2	
D823	8-719-200-82	DIODE 11ES2	
		< EARTH TERMINAL >	
* G200	1-537-738-21	TERMINAL, EARTH	
* G201	1-537-738-21	TERMINAL, EARTH	
* G202	1-537-738-21	TERMINAL, EARTH	
		< IC >	
IC1	8-759-169-99	IC SAA6579 (AEP,G)	
IC2	8-759-636-74	IC M5218AP-22 (AEP,G)	
IC401	8-759-805-14	IC LC7822	
IC402	8-759-636-74	IC M5218AP-22	
IC403	8-759-636-74	IC M5218AP-22	
IC701	8-759-326-52	IC uPC2581V	
IC801	8-759-391-87	IC BA78M12P (AEP,G)	
IC801	8-759-287-58	IC TA78M12P (EXCEPT AEP,G)	
IC802	8-759-700-69	IC NJM79L12A	
IC950	8-759-333-83	IC NJM2103D	
		< JACK >	
J401	1-695-188-31	JACK, PIN 4P (PHONO/CD)	
J402	1-770-015-11	JACK, PIN 6P (TAPE/MD)	
J403	1-695-188-31	JACK, PIN 4P (AEP,G)	
J403	1-573-028-31	JACK, PIN 4P (TV/VIDEO) (EXCEPT AEP,G)	
		< COIL >	
L1	1-410-521-11	INDUCTOR 100uH (AEP,G)	
L401	1-410-509-11	INDUCTOR 10uH	
L402	1-410-509-11	INDUCTOR 10uH (AEP,G)	
L701	1-420-872-00	COIL, AIR-CORE	
L751	1-420-872-00	COIL, AIR-CORE	
		< TRANSISTOR >	
Q303	8-729-922-37	TRANSISTOR 2SD2144S	
Q304	8-729-922-37	TRANSISTOR 2SD2144S	
Q701	8-729-119-76	TRANSISTOR 2SA1175-HFE	

Ref. No.	Part No.	Description	Remark
Q702	8-729-141-30	TRANSISTOR 2SC3623A-LK	
Q703	8-749-010-25	IC MN2488-OPY-M	
Q704	8-749-010-26	IC MP1620-OPY-M	
Q710	8-729-119-78	TRANSISTOR 2SC2785-HFE	
Q711	8-729-140-84	TRANSISTOR 2SC1841-PAFAEA	
Q720	8-729-140-82	TRANSISTOR 2SA988-PAFAEA	
Q721	8-729-140-82	TRANSISTOR 2SA988-PAFAEA	
Q722	8-729-140-84	TRANSISTOR 2SC1841-PAFAEA	
Q723	8-729-119-78	TRANSISTOR 2SC2785-HFE	
Q751	8-729-119-76	TRANSISTOR 2SA1175-HFE	
Q752	8-729-141-30	TRANSISTOR 2SC3623A-LK	
Q753	8-749-010-25	IC MN2488-OPY-M	
Q754	8-749-010-26	IC MP1620-OPY-M	
Q770	8-729-140-82	TRANSISTOR 2SA988-PAFAEA	
Q801	8-729-140-97	TRANSISTOR 2SB734-34	
Q802	8-729-119-78	TRANSISTOR 2SC2785-HFE	
Q803	8-729-030-18	TRANSISTOR 2SD2525	
Q951	8-729-030-18	TRANSISTOR 2SD2525	
		< RESISTOR >	
R1	1-249-433-11	CARBON 22K 5%	1/4W (AEP,G)
R2	1-249-426-11	CARBON 5.6K 5%	1/4W (AEP,G)
R3	1-249-441-11	CARBON 100K 5%	1/4W (AEP,G)
R4	1-249-441-11	CARBON 100K 5%	1/4W (AEP,G)
R5	1-249-421-11	CARBON 2.2K 5%	1/4W (AEP,G)
R6	1-249-405-11	CARBON 100 5%	1/4W (AEP,G)
R7	1-249-405-11	CARBON 100 5%	1/4W (AEP,G)
R298	1-249-385-11	CARBON 2.2 5%	1/6W (US,Canadian)
R299	1-249-385-11	CARBON 2.2 5%	1/6W (US,Canadian)
R304	1-249-441-11	CARBON 100K 5%	1/4W
R352	1-249-441-11	CARBON 100K 5%	1/4W
R353	1-249-425-11	CARBON 4.7K 5%	1/4W
R354	1-249-425-11	CARBON 4.7K 5%	1/4W
R401	1-249-411-11	CARBON 330 5%	1/4W
R402	1-249-421-11	CARBON 2.2K 5%	1/4W
R403	1-249-417-11	CARBON 1K 5%	1/4W
R404	1-249-417-11	CARBON 1K 5%	1/4W
R405	1-249-417-11	CARBON 1K 5%	1/4W
R406	1-249-417-11	CARBON 1K 5%	1/4W
R407	1-249-417-11	CARBON 1K 5%	1/4W
R408	1-249-429-11	CARBON 10K 5%	1/4W
R409	1-249-437-11	CARBON 47K 5%	1/4W
R410	1-247-897-11	CARBON 560K 5%	1/4W
R411	1-249-416-11	CARBON 820 5%	1/4W
R412	1-247-897-11	CARBON 560K 5%	1/4W
R413	1-249-437-11	CARBON 47K 5%	1/4W
R414	1-249-425-11	CARBON 4.7K 5%	1/4W
R416	1-249-417-11	CARBON 1K 5%	1/4W
R417	1-247-897-11	CARBON 560K 5%	1/4W
R418	1-249-417-11	CARBON 1K 5%	1/4W
R419	1-249-417-11	CARBON 1K 5%	1/4W
R420	1-249-441-11	CARBON 100K 5%	1/4W
R421	1-249-417-11	CARBON 1K 5%	1/4W
R435	1-249-418-11	CARBON 1.2K 5%	1/4W
R442	1-249-418-11	CARBON 1.2K 5%	1/4W
R443	1-249-418-11	CARBON 1.2K 5%	1/4W
R447	1-249-416-11	CARBON 820 5%	1/4W
R448	1-249-429-11	CARBON 10K 5%	1/4W
R449	1-249-433-11	CARBON 22K 5%	1/4W
R451	1-249-411-11	CARBON 330 5%	1/4W
R452	1-249-421-11	CARBON 2.2K 5%	1/4W
R453	1-249-417-11	CARBON 1K 5%	1/4W
R454	1-249-417-11	CARBON 1K 5%	1/4W
R455	1-249-417-11	CARBON 1K 5%	1/4W
R456	1-249-417-11	CARBON 1K 5%	1/4W
R457	1-249-417-11	CARBON 1K 5%	1/4W
R458	1-249-429-11	CARBON 10K 5%	1/4W
R459	1-249-437-11	CARBON 47K 5%	1/4W
R460	1-247-897-11	CARBON 560K 5%	1/4W
R461	1-249-416-11	CARBON 820 5%	1/4W
R462	1-247-897-11	CARBON 560K 5%	1/4W
R463	1-249-437-11	CARBON 47K 5%	1/4W
R466	1-249-417-11	CARBON 1K 5%	1/4W
R467	1-247-897-11	CARBON 560K 5%	1/4W
R470	1-249-441-11	CARBON 100K 5%	1/4W
R471	1-249-417-11	CARBON 1K 5%	1/4W
R701	1-249-417-11	CARBON 1K 5%	1/4W
R702	1-249-439-11	CARBON 68K 5%	1/4W
R703	1-249-414-11	CARBON 560 5%	1/4W (AEP,G,SP,MY,CH)
R703	1-249-412-11	CARBON 390 5%	1/4W (US,Canadian,AUS,E)
R704	1-249-439-11	CARBON 68K 5%	1/4W
R710	1-249-421-11	CARBON 2.2K 5%	1/4W
R711	1-249-437-11	CARBON 47K 5%	1/4W
R713	1-249-414-11	CARBON 560 5%	1/4W
⚠R714	1-249-405-11	CARBON 100 5%	1/4W F (SP,MY,CH)
⚠R714	1-249-409-11	CARBON 220 5%	1/4W F (AEP,G)
⚠R714	1-249-408-11	CARBON 180 5%	1/4W F (US,Canadian,E)
⚠R715	1-249-405-11	CARBON 100 5%	1/4W F (SP,MY,CH)
⚠R715	1-249-409-11	CARBON 220 5%	1/4W F (AEP,G)

The components identified by mark ⚠ or dotted line with mark ⚠ are critical for safety. Replace only with part number specified.	Les composants identifiés par une marque ⚠sont critiques pour la sécurité. Ne les remplacer que par une pièce portant le numéro spécifié.

MAIN

Ref. No.	Part No.	Description			Remark
⚠R715	1-249-408-11	CARBON	180	5%	1/4W F (US,Canadian,E)
⚠R716	1-233-594-21	ENCAPSULATED COMPONENT (SP,MY,CH)			
⚠R716	1-233-594-11	ENCAPSULATED COMPONENT (AUS)			
⚠R716	1-233-352-21	ENCAPSULATED COMPONENT (US,Canadian,AEP,G,E)			
⚠R717	1-249-393-11	CARBON	10	5%	1/4W F
R718	1-249-389-11	CARBON	4.7	5%	1/4W
R720	1-249-419-11	CARBON	1.5K	5%	1/4W
R721	1-249-427-11	CARBON	6.8K	5%	1/4W
R723	1-249-437-11	CARBON	47K	5%	1/4W
R724	1-249-429-11	CARBON	10K	5%	1/4W
R725	1-249-429-11	CARBON	10K	5%	1/4W
R726	1-249-417-11	CARBON	1K	5%	1/4W
R727	1-249-427-11	CARBON	6.8K	5%	1/4W
R730	1-249-429-11	CARBON	10K	5%	1/4W
⚠R740	1-249-393-11	CARBON	10	5%	1/4W F
⚠R741	1-249-393-11	CARBON	10	5%	1/4W F
R743	1-249-417-11	CARBON	1K	5%	1/4W
R744	1-249-425-11	CARBON	4.7K	5%	1/4W
R745	1-249-435-11	CARBON	33K	5%	1/4W
R746	1-249-417-11	CARBON	1K	5%	1/4W
R751	1-249-417-11	CARBON	1K	5%	1/4W
R752	1-249-439-11	CARBON	68K	5%	1/4W
R753	1-249-414-11	CARBON	560	5%	1/4W (AEP,G,SP,MY,CH)
R753	1-249-412-11	CARBON	390	5%	1/4W (US,Canadian,AUS,E)
R754	1-249-439-11	CARBON	68K	5%	1/4W
R760	1-249-421-11	CARBON	2.2K	5%	1/4W
R761	1-249-437-11	CARBON	47K	5%	1/4W
R763	1-249-414-11	CARBON	560	5%	1/4W
R764	1-249-405-11	CARBON	100	5%	1/4W (SP,MY,CH)
R764	1-249-409-11	CARBON	220	5%	1/4W (AEP,G)
⚠R764	1-249-408-11	CARBON	180	5%	1/4W F (US,Canadian,E)
⚠R765	1-249-405-11	CARBON	100	5%	1/4W F (SP,MY,CH)
⚠R765	1-249-409-11	CARBON	220	5%	1/4W F (AEP,G)
⚠R765	1-249-408-11	CARBON	180	5%	1/4W F (US,Canadian,E)
⚠R766	1-233-594-21	ENCAPSULATED COMPONENT (SP,MY,CH)			
⚠R766	1-233-594-11	ENCAPSULATED COMPONENT (AUS)			
⚠R766	1-233-352-21	ENCAPSULATED COMPONENT (US,Canadian,AEP,G,E)			
⚠R767	1-249-393-11	CARBON	10	5%	1/4W F
R768	1-249-389-11	CARBON	4.7	5%	1/4W
R770	1-249-419-11	CARBON	1.5K	5%	1/4W
R771	1-249-427-11	CARBON	6.8K	5%	1/4W
R773	1-249-437-11	CARBON	47K	5%	1/4W
R801	1-249-425-11	CARBON	4.7K	5%	1/4W
R802	1-249-389-11	CARBON	4.7	5%	1/4W (AEP,G,SP,MY,CH)
⚠R802	1-247-739-11	CARBON	100	5%	1/2W F (US,Canadian,AUS,E)
⚠R806	1-249-389-11	CARBON	4.7	5%	1/4W F (AEP,G,SP,MY,CH)
⚠R806	1-247-739-11	CARBON	100	5%	1/2W F (US,Canadian,AUS,E)
R807	1-249-425-11	CARBON	4.7K	5%	1/4W
R821	1-249-437-11	CARBON	47K	5%	1/4W
R822	1-249-425-11	CARBON	4.7K	5%	1/4W
R950	1-249-421-11	CARBON	2.2K	5%	1/4W
R951	1-249-429-11	CARBON	10K	5%	1/4W
R952	1-247-843-11	CARBON	3.3K	5%	1/4W
R953	1-249-433-11	CARBON	22K	5%	1/4W
R954	1-249-439-11	CARBON	68K	5%	1/4W
R955	1-249-429-11	CARBON	10K	5%	1/4W
R956	1-247-843-11	CARBON	3.3K	5%	1/4W
R957	1-249-417-11	CARBON	1K	5%	1/4W
R958	1-249-401-11	CARBON	47	5%	1/4W (AEP,G,SP,MY,CH)
R960	1-249-429-11	CARBON	10K	5%	1/4W
R961	1-249-401-11	CARBON	47	5%	1/4W (US,Canadian,AUS,E)
RR01	1-249-418-11	CARBON	1.2K	5%	1/4W (AEP,G)
RR51	1-249-418-11	CARBON	1.2K	5%	1/4W (AEP,G)
		< RELAY >			
RY701	1-515-920-11	RELAY (24V)			
RY701	1-515-533-11	RELAY			
		< TERMINAL >			
TM1	1-537-714-11	TERMINAL BOARD (ANTENNA) (AEP,G,AUS,SP,MY,CH)			
TM1	1-537-240-51	TERMINAL BOARD (CHECKER PIN) (ANTENNA) (US,Canadian,E)			
TM701	1-537-376-11	TERMINAL BOARD (SPEAKER) (SP)			
		< TUNER UNIT >			
TU001	1-233-594-11	ENCAPSULATED COMPONENT (EXCEPT US,Canadian)			
TU001	1-233-593-11	ENCAPSULATED COMPONENT (US,Canadian)			
		< VIBRATOR >			
X1	1-579-900-21	VIBRATOR, CRYSTAL (4.33MHz) (AEP,G)			

****

The components identified by mark ⚠ or dotted line with mark ⚠ are critical for safety. Replace only with part number specified.	Les composants identifiés par une marque ⚠sont critiques pour la sécurité. Ne les remplacer que par une pièce portant le numéro spécifié.

PRIMARY **SECONDARY** **SP SW** **SP SW (A)** **SP SW (B)** **STANDBY**

Ref. No.	Part No.	Description				Remark
*	1-659-972-11	PRIMARY BOARD (EXCEPT E)				
		**********				
	1-533-233-11	HOLDER, FUSE				
		< FUSE >				
⚠F901	1-532-388-51	FUSE FUSE,TIME LAG(T2AL/250V)				(EXCEPT US,Canadian)
⚠F901	1-576-109-11	FUSE (5A/250V) (US,Canadian)				
**********						
*	1-659-973-11	SECONDARY BOARD				
		**********				
		< CONNECTOR >				
CNP801	1-764-478-11	PIN, CONNECTOR (PC BOARD) 9P				
		< RESISTOR >				
⚠R810	1-249-381-11	CARBON	1	5%	1/4W	F
⚠R811	1-249-381-11	CARBON	1	5%	1/4W	F
⚠R901	1-202-725-00	SOLID	3.3M	10%	1/2W	F (US,Canadian)
**********						
*	1-659-974-11	SP SW BOARD				
		**********				
		< CONNECTOR >				
CNP703	1-764-474-11	PIN, CONNECTOR (PC BOARD) 5P				
CNP704	1-764-473-11	PIN, CONNECTOR (PC BOARD) 3P				
		< JACK >				
J741	1-750-733-11	JACK (LARGE TYPE) (PHONES)				
		< RESISTOR >				
R741	1-247-753-11	CARBON	1.2K	5%	1/2W	
R742	1-247-753-11	CARBON	1.2K	5%	1/2W	
R791	1-247-753-11	CARBON	1.2K	5%	1/2W	
R792	1-247-753-11	CARBON	1.2K	5%	1/2W	
RR04	1-249-393-11	CARBON	10	5%	1/4W	(AEP,G)
RR05	1-249-393-11	CARBON	10	5%	1/4W	(AEP,G)
RR54	1-249-393-11	CARBON	10	5%	1/4W	(AEP,G)
RR55	1-249-393-11	CARBON	10	5%	1/4W	(AEP,G)
		< SWITCH >				
S701	1-762-320-11	SWITCH, PUSH (2 KEY) (SPEAKERS A,B)				
**********						

Ref. No.	Part No.	Description	Remark
*	1-659-975-11	SP SW (A) BOARD	
		**********	
**********			
*	1-659-976-11	SP SW (B) BOARD	
		**********	
		< CONNECTOR >	
CNS702	1-770-482-11	CONNECTOR, BOARD TO BOARD 4P	
**********			
*	1-659-970-11	STANDBY BOARD	
		**********	
	1-533-233-11	HOLDER, FUSE	
		< CONNECTOR >	
CN902	1-564-321-00	PIN, CONNECTOR 2P (E)	
CNP802	1-766-203-11	PLUG,CONNECTOR PIN(PC BOARD)5P	
CNP901	1-564-321-00	PIN, CONNECTOR 2P	
CNP903	1-580-230-11	PIN, CONNECTOR (PC BOARD) 2P	(AEP,G,AUS,SP,MY,CH)
* CNP905	1-564-320-00	PIN, CONNECTOR (B2P-VH) 2P (E)	
* CNP906	1-564-687-11	PIN, CONNECTOR 3P (E)	
		< JACK >	
⚠CNJ902	1-540-057-11	OUTLET, AC (POLAR) (US,Canadian,E)	
		< DIODE >	
D816	8-719-815-85	DIODE 1S1585 (AEP,G)	
D816	8-719-987-63	DIODE 1N4148M (EXCEPT AEP,G)	
		< FUSE >	
⚠F902	1-532-464-51	FUSE FUSE,TIME LAG(T2AL/250V)	(AEP,G,SP,MY,CH)
⚠F903	1-532-388-51	FUSE,TIME LAG(T2AL/250V) (E)	
		< TERMINAL, EARTH >	
* G900	1-537-738-21	TERMINAL, EARTH (US,Canadian)	
		< RELAY >	
⚠RY901	1-515-720-11	RELAY	
		< TRANSFORMER >	
⚠T902	1-450-358-11	TRANSFORMER, POWER (EXCEPT US,Canadian)	
⚠T902	1-450-361-11	TRANSFORMER, POWER (US,Canadian)	
**********			

The components identified by mark ⚠ or dotted line with mark ⚠ are critical for safety. Replace only with part number specified.	Les composants identifiés par une marque ⚠sont critiques pour la sécurité. Ne les remplacer que par une pièce portant le numéro spécifié.

TONE VOLUME

Ref. No.	Part No.	Description			Remark
*	A-4389-505-A	TONE BOARD, COMPLETE (EXCEPT AEP,G)			
*	A-4389-526-A	TONE BOARD, COMPLETE (AEP,G)			
		**********			
		< CAPACITOR >			
C421	1-137-440-11	FILM	0.018uF	5%	50V
C422	1-124-463-00	ELECT	0.1uF	20%	50V
C423	1-137-368-11	FILM	0.0047uF	5%	50V
C424	1-137-372-11	FILM	0.022uF	5%	50V
C471	1-137-440-11	FILM	0.018uF	5%	50V
C472	1-124-463-00	ELECT	0.1uF	20%	50V
C473	1-137-368-11	FILM	0.0047uF	5%	50V
C474	1-137-372-11	FILM	0.022uF	5%	50V
		< CONNECTOR >			
* CNP203	1-569-799-11	PLUG, CONNECTOR 5P			
CNS401	1-770-399-11	HOUSING, CONNECTOR(PC BOARD)6P			
		< DIODE >			
D238	8-719-313-72	LED SEL3810A-CD (BASS BOOST)			
		< RESISTOR >			
R236	1-249-419-11	CARBON	1.5K	5%	1/4W (AEP,G)
R236	1-249-411-11	CARBON	330	5%	1/4W (EXCEPT AEP,G)
R237	1-249-421-11	CARBON	2.2K	5%	1/4W (AEP,G)
R237	1-249-413-11	CARBON	470	5%	1/4W (EXCEPT AEP,G)
R238	1-247-843-11	CARBON	3.3K	5%	1/4W (AEP,G)
R238	1-249-415-11	CARBON	680	5%	1/4W (EXCEPT AEP,G)
R239	1-249-425-11	CARBON	4.7K	5%	1/4W (AEP,G)
R239	1-249-417-11	CARBON	1K	5%	1/4W (EXCEPT AEP,G)
R240	1-249-429-11	CARBON	10K	5%	1/4W (AEP,G)
R240	1-249-419-11	CARBON	1.5K	5%	1/4W (EXCEPT AEP,G)
R241	1-247-863-91	CARBON	22K	5%	1/4W (AEP,G)
R241	1-249-421-11	CARBON	2.2K	5%	1/4W (EXCEPT AEP,G)
R243	1-249-429-11	CARBON	10K	5%	1/4W
R244	1-249-425-11	CARBON	4.7K	5%	1/4W
R421	1-249-431-11	CARBON	15K	5%	1/4W
R422	1-249-422-11	CARBON	2.7K	5%	1/4W
R423	1-247-903-00	CARBON	1M	5%	1/4W
R424	1-247-903-00	CARBON	1M	5%	1/4W
R471	1-249-431-11	CARBON	15K	5%	1/4W
R472	1-249-422-11	CARBON	2.7K	5%	1/4W
R473	1-247-903-00	CARBON	1M	5%	1/4W
R474	1-247-903-00	CARBON	1M	5%	1/4W
R475	1-249-415-11	CARBON	680	5%	1/4W
		< VARIABLE RESISTOR >			
RV421	1-223-362-11	RES, VAR, CARBON 100K/100K (BASS)			
RV422	1-223-963-11	RES, VAR, CARBON 125K/125K (TREBLE)			
RV423	1-238-965-21	RES, VAR, CARBON 100K/100K (BALANCE)			
		< SWITCH >			
S230	1-554-303-21	SWITCH, TACTILE (PRESET TUNING –)			
S231	1-554-303-21	SWITCH, TACTILE (TUNING –)			
S232	1-554-303-21	SWITCH, TACTILE (PRESET TUNING +)			
S233	1-554-303-21	SWITCH, TACTILE (SHIFT)			
S234	1-554-303-21	SWITCH, TACTILE (FM/AM)			
S235	1-554-303-21	SWITCH, TACTILE (FM MODE)			
S236	1-554-303-21	SWITCH, TACTILE (BASS BOOST)			
S237	1-554-303-21	SWITCH, TACTILE (TUNING +)			
S238	1-554-303-21	SWITCH, TACTILE (MEMORY)			

****

*	A-4389-504-A	VOLUME BOARD, COMPLETE			
		**********			
		< CAPACITOR >			
C420	1-162-207-31	CERAMIC	22PF	5%	50V
C425	1-126-096-11	ELECT	10uF	20%	35V
C426	1-126-096-11	ELECT	10uF	20%	35V
C427	1-124-252-00	ELECT	0.33uF	20%	50V
C428	1-130-489-00	MYLAR	0.033uF	5%	50V
C429	1-102-973-00	CERAMIC	100PF	5%	50V
C430	1-126-301-11	ELECT	1uF	20%	50V
C431	1-126-301-11	ELECT	1uF	20%	50V
C432	1-126-096-11	ELECT	10uF	20%	35V
C433	1-126-096-11	ELECT	10uF	20%	35V
C470	1-162-207-31	CERAMIC	22PF	5%	50V
C475	1-126-096-11	ELECT	10uF	20%	35V
C476	1-126-096-11	ELECT	10uF	20%	35V
C477	1-124-252-00	ELECT	0.33uF	20%	50V
C478	1-130-489-00	MYLAR	0.033uF	5%	50V
C479	1-102-973-00	CERAMIC	100PF	5%	50V
C492	1-124-464-11	ELECT	0.22uF	20%	50V
		< CONNECTOR >			
CNP202	1-770-388-11	PIN, CONNECTOR (PC BOARD) 4P			
CNP401	1-770-390-11	PIN, CONNECTOR (PC BOARD) 6P			
CNS403	1-569-060-11	SOCKET, CONNECTOR 11P			
		< DIODE >			
D421	8-719-815-85	DIODE 1S1585 (AEP,G)			
D421	8-719-987-63	DIODE 1N4148M (EXCEPT AEP,G)			

Ref. No.	Part No.	Description				Remark
		< IC >				
IC404	8-759-636-74	IC M5218AP-22				
		< TRANSISTOR >				
Q401	8-729-202-67	TRANSISTOR 2SK246-GR3				
Q402	8-729-922-37	TRANSISTOR 2SD2144S				
Q451	8-729-202-67	TRANSISTOR 2SK246-GR3				
Q452	8-729-922-37	TRANSISTOR 2SD2144S				
		< RESISTOR >				
R425	1-249-429-11	CARBON	10K	5%	1/4W	
R426	1-249-439-11	CARBON	68K	5%	1/4W	
R427	1-249-417-11	CARBON	1K	5%	1/4W	
R430	1-249-437-11	CARBON	47K	5%	1/4W	
R431	1-247-843-11	CARBON	3.3K	5%	1/4W	
R432	1-247-883-00	CARBON	150K	5%	1/4W	
R433	1-249-427-11	CARBON	6.8K	5%	1/4W	
R434	1-249-413-11	CARBON	470	5%	1/4W	
R438	1-249-441-11	CARBON	100K	5%	1/4W	
R441	1-249-441-11	CARBON	100K	5%	1/4W	
R444	1-247-903-00	CARBON	1M	5%	1/4W	
R464	1-247-903-00	CARBON	1M	5%	1/4W	
R469	1-247-903-00	CARBON	1M	5%	1/4W	
R475	1-249-429-11	CARBON	10K	5%	1/4W	
R476	1-249-439-11	CARBON	68K	5%	1/4W	
R477	1-249-417-11	CARBON	1K	5%	1/4W	
R480	1-249-437-11	CARBON	47K	5%	1/4W	
R481	1-247-843-11	CARBON	3.3K	5%	1/4W	
R482	1-247-883-00	CARBON	150K	5%	1/4W	
R483	1-249-427-11	CARBON	6.8K	5%	1/4W	
R484	1-249-413-11	CARBON	470	5%	1/4W	
R491	1-249-441-11	CARBON	100K	5%	1/4W	
R492	1-247-903-00	CARBON	1M	5%	1/4W	
R494	1-247-903-00	CARBON	1M	5%	1/4W	
		< VARIABLE RESISTOR >				
RV404	1-241-426-11	RES, VAR, CARBON 100KX2 (VOLUME)				

****

*	1-659-978-11	VOLTAGE SELECTOR BOARD (E)
		**********
*	1-533-233-11	HOLDER, FUSE
		< CONNECTOR >
* CNP907	1-565-395-11	PIN, CONNECTOR 3P
CNP908	1-564-321-00	PIN, CONNECTOR 2P
* CNP910	1-564-687-11	PIN, CONNECTOR 3P

Ref. No.	Part No.	Description	Remark
		< FUSE >	
⚠F904	1-532-388-51	FUSE,TIME LAG(T2AL/250V)	
		< SWITCH >	
⚠S901	1-571-437-11	SWITCH, POWER VOLTAGE CHANGE (VOLTAGE SELECTOR)	

****

		MISCELLANEOUS
		**********
9	1-765-343-11	WIRE (FLAT TYPE) (23 CORE) (AEP,G,SP,MY,CH)
9	1-773-114-11	WIRE (FLAT TYPE) (19 CORE) (US,Canadian,AUS,E)
10	1-769-941-11	WIRE (FLAT TYPE) (11 CORE)
⚠70	1-696-847-11	CORD, POWER (AUS)
⚠70	1-769-743-11	CORD, POWER (US,Canadian)
⚠70	1-769-744-11	CORD, POWER (AEP,G,E,SP,MY,CH)
⚠71	1-569-008-21	ADAPTOR, CONVERSION 2P (E)
⚠CNJ902	1-540-057-11	OUTLET, AC (POLAR) (US,Canadian,E)
⚠CNJ903	1-251-416-11	OUTLET, A.C. (AUS)
⚠CNJ903	1-526-794-11	OUTLET, AC (AEP,G,SP,MY,CH)
⚠F901	1-532-388-51	FUSE FUSE,TIME LAG(T2AL/250V) (EXCEPT US,Canadian)
⚠F901	1-576-109-11	FUSE (5A/250V) (US,Canadian)
⚠F902	1-532-464-51	FUSE FUSE,TIME LAG(T2AL/250V) (AEP,G,SP,MY,CH)
⚠F903	1-532-388-51	FUSE,TIME LAG(T2AL/250V) (E)
⚠F904	1-532-388-51	FUSE,TIME LAG(T2AL/250V) (E)
FL201	1-517-141-11	INDICATOR TUBE, FLUORESCENT
⚠T901	1-429-516-11	TRANSFORMER, POWER (US)
⚠T901	1-429-517-11	TRANSFORMER, POWER (Canadian)
⚠T901	1-429-518-11	TRANSFORMER, POWER (AUS)
⚠T901	1-429-519-11	TRANSFORMER, POWER (E)
⚠T901	1-429-520-11	TRANSFORMER, POWER (AEP,G,SP,MY,CH)

****

	ACCESSORIES & PACKING MATERIALS
	**********
1-473-632-11	REMOTE COMMANDER (RM-U264)
1-501-374-11	ANTENNA, LOOP
1-501-594-11	ANTENNA (FM) (AEP,G,AUS,SP,MY,CH)
1-501-721-11	ANTENNA (LOOP)
3-810-995-11	MANUAL, INSTRUCTION (ENGLISH,FRENCH,GERMAN,DUTCH)(AEP,G)
3-810-995-21	MANUAL, INSTRUCTION (ENGLISH)(US)
3-810-995-31	MANUAL, INSTRUCTION (ENGLISH,FRENCH)(Canadian)
3-810-995-41	MANUAL, INSTRUCTION (SPANISH,SWEDISH,FINNISH)(AEP)
3-810-995-71	MANUAL, INSTRUCTION (ENGLISH,FRENCH, SPANISH,CHINESE) (AUS,E,SP,MY,CH)
4-981-643-01	COVER,BATTERY (FOR RM-U264)

The components identified by mark ⚠ or dotted line with mark ⚠ are critical for safety. Replace only with part number specified.	Les composants identifiés par une marque ⚠sont critiques pour la sécurité. Ne les remplacer que par une pièce portant le numéro spécifié.

Ref. No.	Part No.	Description	Remark
*	4-982-139-02	CUSHION (US,Canadian,AUS,E,SP,MY,CH)	
*	4-982-144-01	INDIVIDUAL CARTON (US,Canadian,AUS,E)	
*	4-982-145-01	INDIVIDUAL CARTON (SP,MY,CH)	
*	4-982-760-01	CUSHION (AEP,G)	
*	4-982-757-01	INDIVIDUAL CARTON (AEP,G)	

****

****
HARDWARE LIST
****

#1	7-685-646-79	SCREW +BVTP 3X8 TYPE2 TT(B)	
#2	7-682-560-04	SCREW +BVTT 4X6 (S)	
#3	7-682-548-04	SCREW +BVTT 3X8 (S)	

9-960-470-12

Sony Corporation
Home A&V Products Company

English
96F0253-1
Printed in Japan
© 1996.6
Published by Quality Engineering Dept.
(Shibaura)